# INSTALLATION INSTRUCTIONS
# TANKPAK 1 WATER HEATER MOUNTING BRACKET KIT
## (P/N 299885)

This installation instruction details the mounting of the Tankpak 1 Water Heater Mounting Bracket Kit and continuous flow water heater (872 series or 862B/872B series) onto a 6N0/610 series storage tank (325L – 6N0325M0, 325L- 61034050 or 410L- 61043050).

**TANK MOUNTING BRACKET KIT**

This kit contains:

| Part No | Kit Components and Description | QTY | Reference |
|---|---|---|---|
| 101741 | Gas boost mounting bracket for Tankpak 1 | 1 | - |
| 080031 | Screws phillips pan head – no 8 x 13 | 10 | A |
| 080156 | M6 x 12 bolt (pack of 3) | 2 | B |
| 122136 | Installation instructions Tankpak 1 water heater mounting bracket kit | 1 | - |

**INSTALLATION FOR 862B/872B SERIES**

**MOUNTING THE WATER HEATER TO THE STORAGE TANK**

The water heater is required to be mounted on and connected to the storage tank. They are connected together with the supplied fittings.

To mount the water heater to the storage tank:

1 Find the correct model of the tank (325L or 410L) to determine the flue terminal clearance to the wall and at the front.

**Note:** The water heater must be located to ensure that the location of the flue terminal complies with the requirements of AS/NZS 5601.1.

2 Position the mounting bracket in a vertical position, towards the top, on the tank.

**Note:** The top of the bracket is the end which has a cut-out in the centre of the bracket.

3 Fix the bracket to the tank securely using the 8 x 13 mounting screws (A) provided, ensuring the bracket is in a vertical position. Insert 1 x M6 x 12 bolt (B) to top centre, leaving enough to hook heater bracket onto. Refer Figure 1.

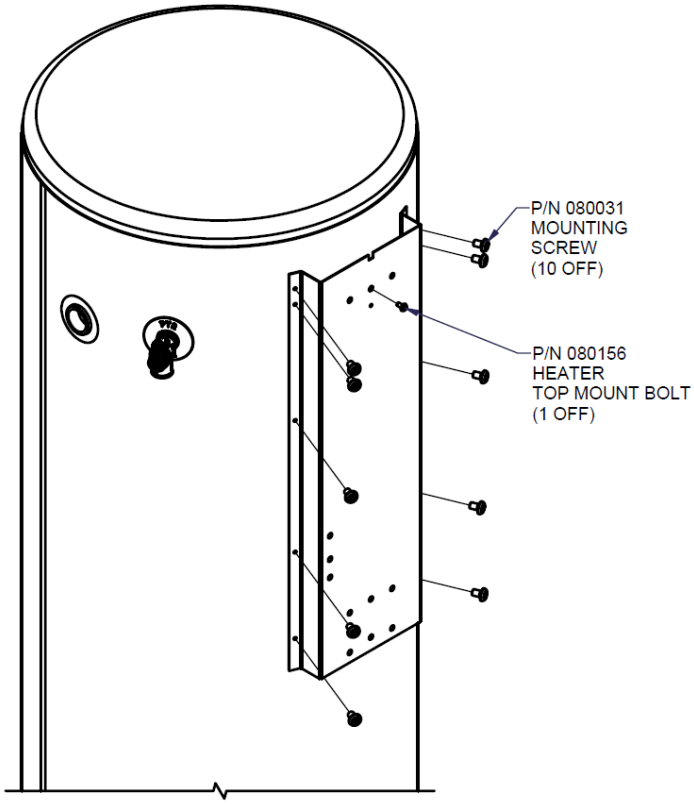


Figure 1

4 Fit the water heater to the mounting bracket on the storage tank by hooking the top bracket of the water heater onto the top bolt. Refer Figure 2 (internal model shown however procedure is the same for external model). Tighten the bolt.

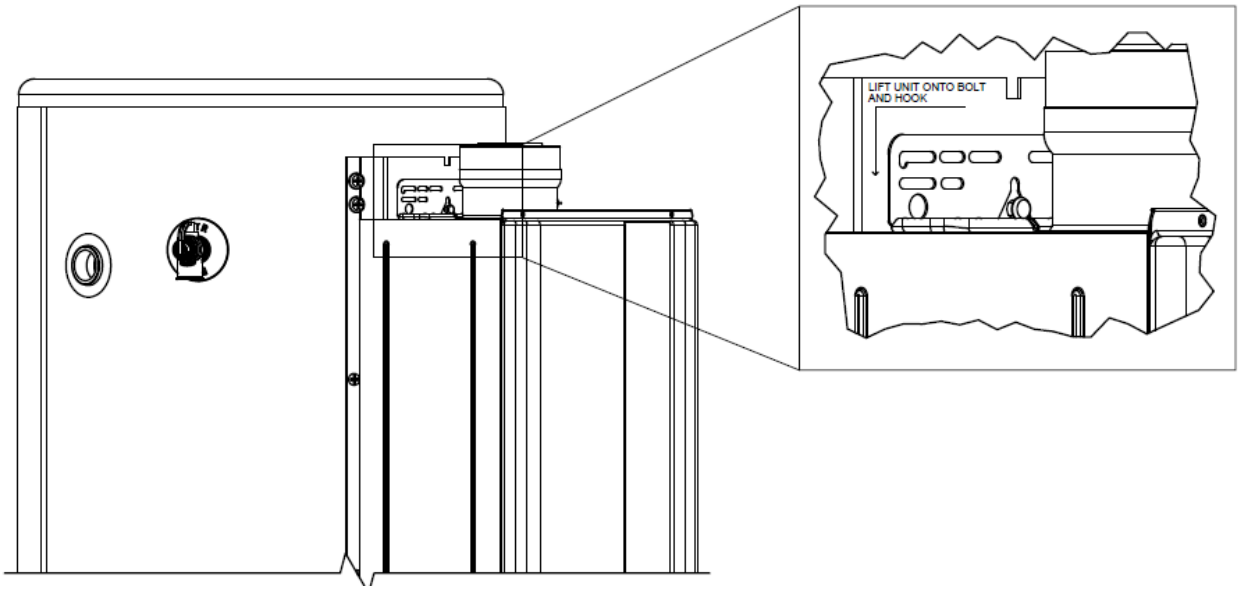


Figure 2

5 Secure the water heater to the bottom of the mounting bracket using bolt (B) provided. Add two bolts either side of the top and the bottom bolts – refer Figure 3 (note: CFWH removed for clarity purposes).

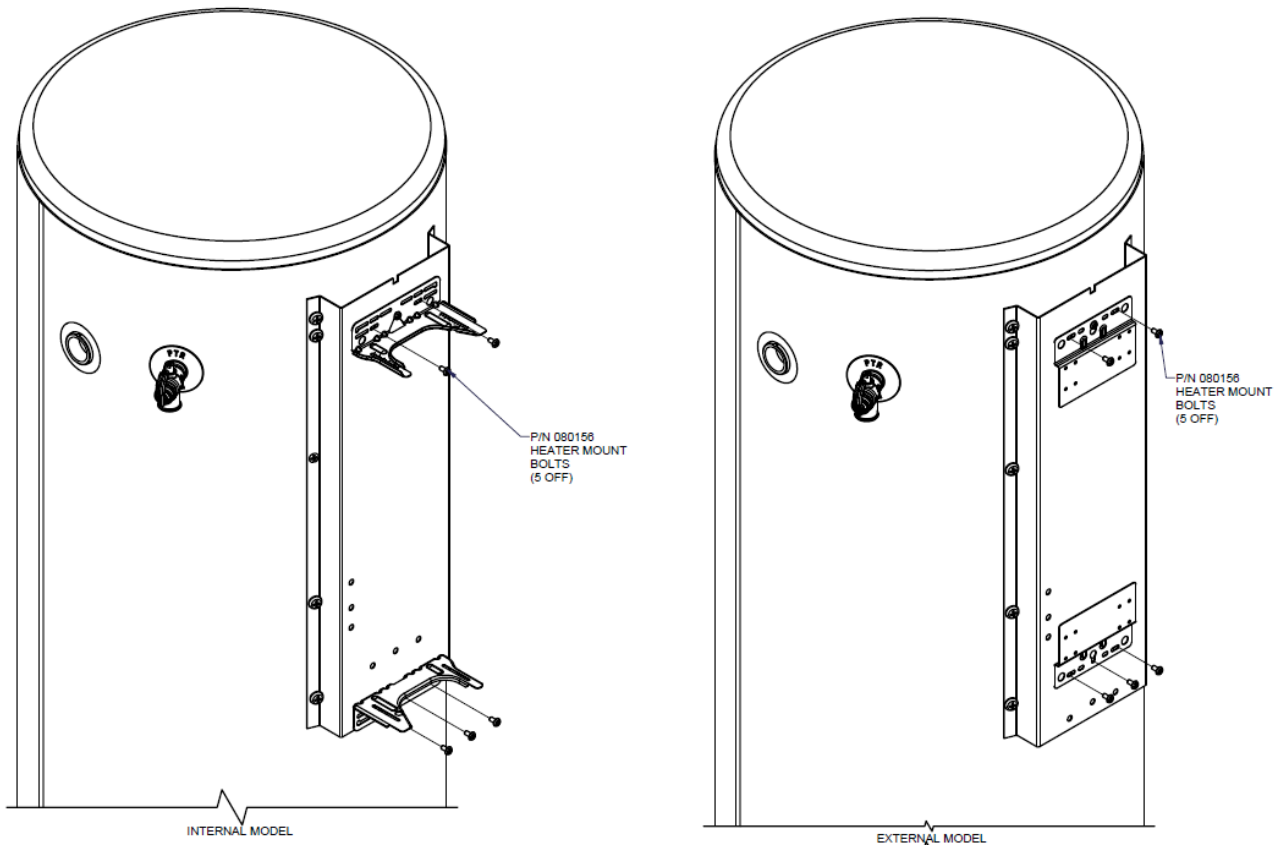


Figure 3

**INSTALLTION FOR 872 SERIES ONLY (EXTERNAL MODEL ONLY)**

**REPOSITIONING WATER HEATER BRACKETS**

It is necessary to remove, reposition and refit the top and bottom mounting bracket parts of the water heater so it can be mounted onto the mounting bracket to be fitted to the storage tank.

1. Remove the screws securing the top bracket of the water heater, rotate the bracket 180° and refit the screws in the same locating holes. Refer to the repositioning top mounting bracket diagram (Figures 4 and 5).

2. Remove the screws securing the bottom bracket at the rear of the water heater, reposition the bracket across to the right of the water heater (as viewed from the rear face) and refit the screws in the locating holes. Refer to the repositioning bottom mounting bracket diagram (Figures 4 and 5).

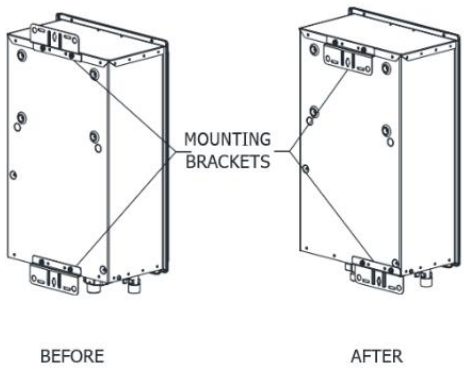


Figure 4

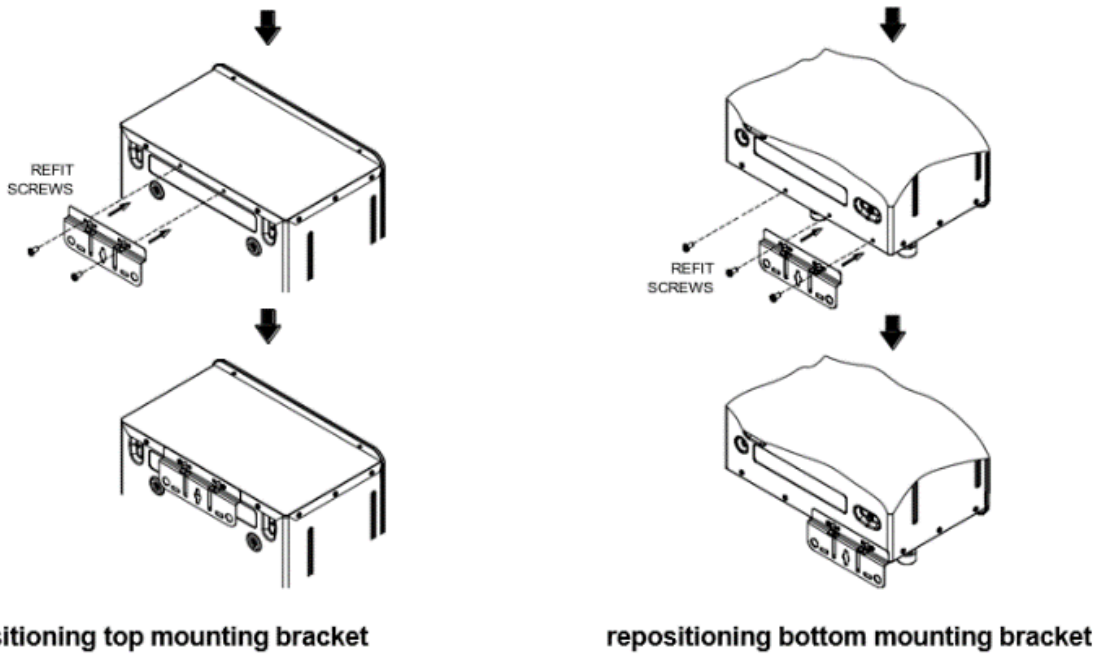


Figure 5

**MOUNTING THE WATER HEATER TO THE STORAGE TANK**

The water heater is required to be mounted on and connected to the storage tank. They are connected together with the supplied fittings.

To mount the water heater to the storage tank:

1 Find the correct model of the tank (325L or 410L) to determine the flue terminal clearance to the wall and at the front.

**Note:** The water heater must be located to ensure that the location of the flue terminal complies with the requirements of AS/NZS 5601.1.

2 Position the mounting bracket in a vertical position, towards the top, on the tank.

**Note:** The top of the bracket is the end which has a cut-out in the centre of the bracket.

3 Fix the bracket to the tank securely using the 8 x 13 mounting screws (A) provided, ensuring the bracket is in a vertical position.

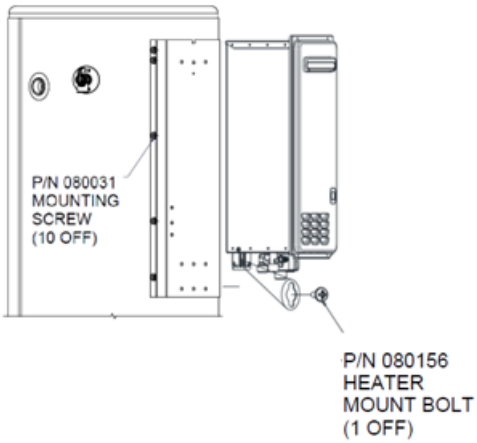


Figure 6

4 Fit the water heater to the mounting bracket on the storage tank by hooking the top bracket of the water heater over the mounting bracket.

5 Secure the water heater to the bottom left of the mounting bracket using the bolt (B) provided.

**PLUMBING BETWEEN TANK AND WATER HEATER (ALL MODELS)**

Refer to the installation instructions supplied with the storage tank, the water heater and Pump C Controller for instruction on how to complete the installation and commission the system.

**DIMENSIONS AND CLEARANCES (ALL MODELS)**

Refer to the section “Dimensions and Technical Data” in the installation instructions supplied with the storage tank and water heater unit for further dimensional information, clearances and technical data.