Owner's Guide
and
Installation Instructions

Air Sourced 571D270 Ambiheat Sidevent Heat Pump Water Heater

This water heater must be installed and serviced by a qualified person.
Please leave this guide with the householder.

An electronic copy of these Owner's Guide and Installation Instructions can be downloaded from rheem.com.au and rheem.co.nz.

PATENTS

This water heater may be protected by one or more patents or registered designs in the name of Rheem Australia Pty Ltd.

TRADE MARKS

® Registered trademark of Rheem Australia Pty Ltd and / or Rheem New Zealand Limited.
™ Trademark of Rheem Australia Pty Ltd and / or Rheem New Zealand Limited.

Note: Every care has been taken to ensure accuracy in preparation of this publication.
No liability can be accepted for any consequences, which may arise as a result of its application.

CONTENTS

HOUSEHOLDER

This booklet contains important information about your new water heater, including terms of the Rheem warranty.

We recommend you read pages 7 to 37, and the terms of the Rheem warranty on pages 4 to 6.

The other pages are intended for the installer but may be of interest.

Warranty 4

Safety, Warnings, Installation Notes 7

About Your Water Heater 10

Display Panel 14

Maintenance Requirements 30

Water Supplies 32

Save A Service Call 35

Installation 38

Connections – Plumbing 46

Connections – Electrical 49

Multiple Installations 50

Commissioning 54

Draining The Water Heater 55

Installation Report 57

RHEEM AUSTRALIA PTY LTD, A.B.N. 21 098 823 511
RHEEM NEW ZEALAND LIMITED, NZBC 9429036696031
www.rheem.com.au, www.rheem.co.nz
For Service Telephone 131 031 AUSTRALIA or 0800 657 335 NEW ZEALAND

RHEEM HEAT PUMP WATER HEATER WARRANTY
- AUSTRALIA AND NEW ZEALAND ONLY -

HEAT PUMP WATER HEATER MODEL 571D270

1. THE RHEEM WARRANTY – GENERAL

1.1 This warranty is given in Australia by Rheem Australia Pty Limited ABN 21 098 823 511 of 1 Alan Street, Rydalmere New South Wales, and in New Zealand by Rheem New Zealand Limited of 475 Rosebank Road Avondale Auckland 1026.

1.2 Rheem offer a trained and qualified national service network who will repair or replace components at the address of the water heater subject to the terms of the Rheem warranty. Rheem Service, in addition can provide preventative maintenance and advice on the operation of your water heater. The Rheem Service contact number in Australia is 131031, with Contact Centre personnel available 24 hours, 7 days a week to take your call and if necessary to arrange a service call for during normal working hours Monday to Friday (hours subject to change) or in New Zealand on 0800 657 335.

1.3 For details about this warranty, you can contact us in Australia on 131031 or by email at warrantyenquiry@rheem.com.au (not for service bookings), or in New Zealand on 0800 657 335 or by email at rheem@rheem.co.nz (not for service bookings).

1.4 The terms of this warranty and what is covered by it are set out in sections 2 and 3 and apply to water heaters manufactured from the 1st September 2025.

1.5 If a subsequent version of this warranty is published, the terms of that warranty and what is covered by it will apply to water heaters manufactured after the date specified in the subsequent version.

2. TERMS OF THE RHEEM WARRANTY AND EXCLUSIONS TO IT

2.1 The decision of whether to repair or replace a faulty component is at Rheem's sole discretion.

2.2 If you require a call out and we find that the fault is not covered by the Rheem warranty, you are responsible for our standard call out charge. If you wish to have the relevant component repaired or replaced by Rheem, that service will be at your cost.

2.3 Where a failed component or cylinder is replaced under this warranty, the balance of the original warranty period will remain effective. The replacement does not carry a new Rheem warranty.

2.4 Where the water heater is installed outside the boundaries of a metropolitan area as defined by Rheem or further than 25 km from either a regional Rheem branch office or an Accredited Rheem Service Agent's / Centre's office, the cost of transport, insurance and travelling between the nearest branch office or Rheem Accredited Service Agent's / Centre's office and the installed site shall be the owner's responsibility.

2.5 Where the water heater is installed in a position that does not allow safe or ready access, the cost of that access, including the cost of additional materials handling and/or safety equipment, shall be the owner's responsibility. In other words, the cost of dismantling or removing cupboards, doors or walls and the cost of any special equipment to bring the water heater to floor or ground level or to a serviceable position is not covered by this warranty.

2.6 This warranty only applies to the original and genuine Rheem water heater in its original installed location and any genuine Rheem replacement parts.

2.7 The Rheem warranty does not cover faults that are a result of:

a) Accidental damage to the water heater or any component (for example: (i) Acts of God such as floods, storms, fires, lightning strikes and the like; and (ii) third party acts or omissions).

b) Misuse or abnormal use of the water heater.

c) Installation not in accordance with the Owner's Guide and Installation Instructions or with relevant statutory and local requirements in the State or Territory in which the water heater is installed.

d) Connection at any time to a water supply that does not comply with the water supply guidelines as outlined in the Owner's Guide and Installation Instructions.

e) Repairs, attempts to repair or modifications to the water heater by a person other than Rheem Service or a Rheem Accredited Service Agent / Centre technician.

f) Faulty plumbing or faulty power supply.

HEAT PUMP WATER HEATER MODEL 571D270

g) Failure to maintain the water heater in accordance with the Owner's Guide and Installation Instructions.

h) Transport damage.

i) Fair wear and tear from adverse conditions (for example, corrosion).

j) Cosmetic defects.

k) Ice formation in the waterways of a water heater system incorporating a freeze protection system where the electricity supply has been switched off or has failed.

l) Corrosion caused by exposure to a corrosive environment such as coastal sea air, industrial or geothermal sulphur contamination environments, e.g., on the coast or in geothermal regions such as Rotorua, where high levels of atmospheric Sulphur Dioxide are present in the atmosphere.

2.8 Rheem may reject a claim under this warranty in its sole discretion if a third party solar diverter is connected to the water heater.

2.9 Subject to any statutory provisions to the contrary, this warranty excludes any and all claims for damage to furniture, carpet, walls, foundations or any other consequential loss either directly or indirectly due to leakage from the water heater, or due to leakage from fittings and/ or pipe work of metal, plastic or other materials caused by water temperature, workmanship or other modes of failure.

2.10 If the water heater is not sized to supply the hot water demand in accordance with the guidelines in the Rheem water heater literature, any resultant fault will not be covered by the Rheem warranty.

2.11 In New Zealand this warranty excludes to the extent permissible all implied warranties set out in the Sale of Goods Act 1908 (New Zealand) and all guarantees set out in the Consumers Guarantees Act 1993 (New Zealand) to the extent that the goods are acquired for the purpose of resupply in trade consumption in the course of a process of production or manufacture or repairing or treating in trade other goods or fixtures on land.

3. WHAT IS COVERED BY THE RHEEM WARRANTY FOR THE WATER HEATERS DETAILED IN THIS DOCUMENT

3.1 Rheem will repair or replace a faulty component of your water heater if it fails to operate in accordance with its specifications as follows:

What components are covered	The period from the date of installation in which the fault must appear in order to be covered	What coverage you receive
571D series 270 model		
All components	Year 1	Repair and/or replacement of the faulty component, free of charge, including labour.
Sealed System* components (if the water heater is installed in a single-family domestic dwelling)	Years 2 & 3	Repair and/or replacement of the faulty component, free of charge, including labour.
The cylinder (if the water heater is installed in a single-family domestic dwelling)	Years 2 & 3	Repair and / or replacement of the cylinder, free of charge, including labour.
	Years 4 to 10	Replacement cylinder, free of charge. Installation and repair labour costs are the responsibility of the owner.
The cylinder (if the water heater is not installed in a single-family domestic dwelling)	Years 2 & 3	Replacement cylinder, free of charge. Installation and repair labour costs are the responsibility of the owner.

* The Sealed System includes components that carry refrigerant only, e.g. Compressor, Condenser, TX Valve, Receiver / Drier, Evaporator and associated pipe work.

HEAT PUMP WATER HEATER MODEL 571D270

3.2 Without limiting the periods shown in the table in Clause 3.1, a 5-year whole-of-product warranty inclusive of labour applies where:

a) A hot water rebate has been received under Solar Victoria's Solar Homes Program for a heat pump water heater installed from 1 July 2023, and / or

b) Victorian Energy Efficiency Certificates (VEECs) have been created for a heat pump water heater installed from 1 February 2025.

For further details, call 131 031. Proof of receipt of the rebate and / or proof of VEECs being created, i.e. installation quote showing number of VEECs and dollar value, plus proof of purchase (as applicable) must be produced at the time of the service call.

4. ENTITLEMENT TO MAKE A CLAIM UNDER THIS WARRANTY

4.1 To be entitled to make a claim under this warranty you need to:

a) Be the owner of the water heater or have consent of the owner to act on their behalf

b) Contact Rheem Service without undue delay after detection of the defect and, in any event, within the applicable warranty period.

4.2 You are not entitled to make a claim under this warranty if your water heater:

a) Does not have its original serial numbers or rating labels.

b) Is not installed in Australia or New Zealand.

5. HOW TO MAKE A CLAIM UNDER THIS WARRANTY

5.1 If you wish to make a claim under this warranty, you need to:

a) Contact Rheem on 131031 in Australia or 0800 657 335 in New Zealand and provide owner's details, address of the water heater, a contact number and date of installation of the water heater or if that's unavailable, the date of manufacture and serial number (from the rating label on the water heater).

b) Rheem will arrange for the water heater to be tested and assessed on-site.

c) If Rheem determines that you have a valid warranty claim, Rheem will repair or replace the water heater in accordance with this warranty.

5.2 Any expenses incurred in the making of a claim under this warranty will be borne by you.

6. THE AUSTRALIAN CONSUMER LAW

6.1 Our goods come with guarantees that cannot be excluded under the Australian Consumer Law. You are entitled to a replacement or refund for a major failure and for compensation for any other reasonably foreseeable loss or damage. You are also entitled to have the goods repaired or replaced if the goods fail to be of acceptable quality and the failure does not amount to a major failure.

6.2 The Rheem warranty (set out above) is in addition to any rights and remedies that you may have under the Australian Consumer Law.

7. THE CONSUMER GUARANTEES ACT 1993 (NEW ZEALAND)

7.1 Our goods come with guarantees that cannot be excluded under the Consumer Guarantees Act 1993 (New Zealand). If the goods fail to comply with the applicable guarantees set out under the Consumer Guarantees Act 1993 (New Zealand) being the guarantee as to acceptable quality, the guarantee as to correspondence with description or the guarantee as to repair and parts, or if the goods fail to comply with any express guarantee given by Rheem, then you are entitled to a replacement or refund and for compensation for any other reasonably foreseeable loss or damage.

7.2 The Rheem warranty (set out above) is in addition to any rights and remedies that you may have under the Consumer Guarantees Act 1993 (New Zealand).

SAFETY, WARNINGS, INSTALLATION NOTES

It is important you read the following Safety and Warnings, and Relief Valves information.

⚠ SAFETY AND WARNINGS

- The heat pump will operate until a water temperature of 60°C is reached. If the ambient air temperature is outside of the heat pump's operating range and heating of water is required, an electric heating unit will heat the water temperature to 60°C.

  This temperature is sufficiently hot to cause severe scalding. Water at this temperature may have been plumbed to fixtures where water hotter than 50°C is allowed, such as the kitchen and laundry.

  Refer to:

  - "How Hot Should the Water Be?" on page 11, and
  - "Hotter Water Increases the Risk of Scald Injury" on page 11.

- This water heater is only intended to be operated by persons who have the experience or the knowledge and the capabilities to do so.

- This water heater is not intended to be operated by persons with reduced physical, sensory or mental capabilities i.e. the infirm, or by children. Children should be supervised to ensure they do not interfere with or play with or at the water heater.

- If the electrical supply conduit to the water heater is damaged, it must be replaced by a qualified person in order to avoid a hazard. Phone Rheem Service or their nearest Accredited Service Agent / Centre to arrange for an inspection.

- This water heater uses 220 V - 240 V a.c. electrical power for operation of the control systems and the electrically operated components. The removal of the access covers will expose 220 V - 240 V a.c. wiring. They must only be removed by a qualified person. Do not operate the water heater with any of the covers removed.

- This water heater is supplied with an electronic thermostat, an over-temperature energy cut-out and a combination temperature pressure relief valve. These devices must not be tampered with or removed. The water heater must not be operated unless each of these devices is fitted and is in working order.

  The Rheem warranty may not cover faults if relief valves or other safety devices are tampered with or if the installation is not in accordance with these instructions.

- **DANGER:** The operation of the over-temperature cut-out on the thermostat indicates a possibly dangerous situation. If the over-temperature cut-out operates, it must not be reset and the water heater must be serviced by a qualified person.

- For continued safety of this water heater it must be installed, operated and maintained in accordance with the Owner's Guide and Installation Instructions.

- The lever on the temperature pressure relief valve and expansion control valve (if fitted) requires to be operated every six (6) months to clear any deposits and to ensure the valve and its drain line are not blocked.

  Refer to:

  - "Relief Valves" on page 8, and
  - "Minor Maintenance Every Six Months" on page 30.

- Servicing of the water heater must only be carried out by qualified personnel. Phone Rheem Service or their nearest Accredited Service Agent / Centre.

- Only a person qualified to install or service a water heater can drain the water heater, if this is required.

- Do not modify this water heater.

- In areas where there is a risk of freezing conditions, power must be available to the water heater at all times and the electrical supply to the water heater should not be switched off, otherwise damage could result.

  Refer to:

  - "Freeze Protection" on page 10, and
  - "To Turn Off the Water Heater" on page 12.

- Do not use **aerosols, stain removers and household chemicals** in the vicinity of this water heater while it is in operation. Gases from some aerosol sprays, stain removers and household chemicals are corrosive to the materials used in the heat pump system.

- Do not store swimming pool chemicals, household cleaners, etc., near the water heater.

- Ensure the air flow, air inlet louvres and outlet grille are not obstructed in any way at any time.

RELIEF VALVES

Temperature Pressure Relief Valve

This water heater incorporates a temperature pressure relief valve located near the top of the water heater. This valve is essential for the water heater's safe operation.

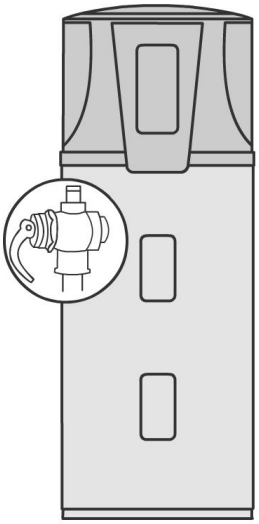

It is possible for the valve to discharge a quantity of water through the drain line during each heating period. This quantity should be equal to approximately 1/50 of the hot water used, as water expands by this volume when heated.

Expansion Control Valve

In many areas, including South Australia, Western Australia, New Zealand and scaling water areas, it is mandatory an expansion control valve is fitted to the cold water line to the water heater.

The expansion control valve will discharge the quantity of water from its drain line during the heating period instead of the temperature pressure relief valve as it has a lower pressure rating.

Valve Operation

Continuous leakage of water from either valve and its drain line may indicate a problem with the water heater. Refer to "Temperature Pressure Relief Valve or Expansion Control Valve Running" on page 36.

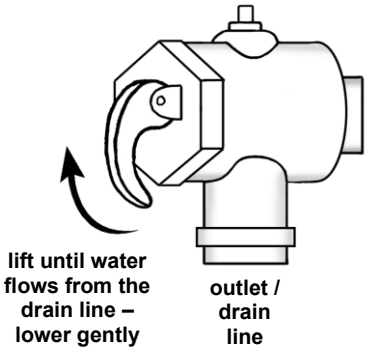

⚠ **Warning:** Never block the outlet of either valve or their drain lines for any reason. A relief valve drain must be left open to atmosphere and be installed in a continuously downward direction.

In locations where water pipes are prone to freezing, the relief valve drain line must be insulated and not exceed 300 mm in length before discharging into a tundish through an air gap.

Operate the easing lever on the temperature pressure relief valve and expansion control valve once every six (6) months to clear any deposits and ensure the valve and its drain line are not blocked. **It is very important the lever is raised and lowered gently.** Refer to "Minor Maintenance Every Six Months" on page 30.

⚠ **Warning:** Water discharged from the temperature pressure relief valve drain line will be hot. Exercise care to avoid any splashing of water by standing clear of the drain line's point of discharge when operating either valve's easing lever.

⚠ **DANGER:** Failure to operate the easing lever on the relief valve once every six (6) months may result in the water heater cylinder failing, or under certain circumstances, exploding.

If water does not flow freely from the drain line when the lever is lifted, then the water heater must be checked. Phone Rheem Service or their nearest Accredited Service Agent / Centre to arrange for an inspection.

The temperature pressure relief valve should be replaced at intervals not exceeding five (5) years and the expansion control valve should be checked for performance or replaced at intervals not exceeding five (5) years. The checking of the valves performance or replacement should occur more frequently in areas where there is a high incidence of water deposits. Refer to "Water Supplies" on page 32.

INSTALLATION NOTES

This water heater must be installed:

- by a qualified person,
- in accordance with the installation instructions,
- in compliance with the Plumbing Code of Australia (PCA) and Plumbing Standard AS/NZS 3500.4,
  - This water heater is designed for outdoor installation only.
  - This water heater is intended to be permanently connected to the water mains and not connected by a hose-set. A braided flexible hose or semi-flexible connector may be used for connection to the water heater, where permitted by AS/NZS 3500.4.
  - Refer to dimensions diagram on page 43 for clearance requirements to provide adequate ventilation for the heat pump module.
- in compliance with the Australian / New Zealand Wiring Rules AS/NZS 3000,
  - Isolation switches must be installed in the electrical circuit to the water heater in accordance with the Wiring Rules, so the water heater can be switched off.
  - The water heater must be directly connected to the mains power supply.
  - The power supply wires are to be directly connected to the terminal block and earth tab connection, with no excess wire loops inside the front cover. The temperature rating of the power supply wires insulation must suit this application, or the wiring protected by insulating sleeving with an appropriate temperature rating if it can make contact with the internal storage cylinder. The temperature of the internal storage cylinder can reach 60°C under normal operation.
- in compliance with all local codes and regulatory authority requirements.
- in New Zealand also conforming to Clauses G12 and H1 of the New Zealand Building Code.

Installation and commissioning requirements and details for the installing plumber and licensed electrical worker are contained on pages 38 to 55.

Mains pressure water supply

The water heater is designed to operate at mains pressure by connecting directly to the mains water supply.

The water heater is supplied with a temperature pressure relief valve with a pressure rating of 1000 kPa. If an expansion control valve has been installed on the cold water line to the water heater, this should have a pressure rating of 850 kPa.

The maximum mains water supply pressure for the water heater is 800 kPa if an expansion control valve is not installed, or 680 kPa if an expansion control valve is installed. If the mains supply pressure in your area exceeds these values, a pressure limiting valve must be installed.

The supply pressure should be greater than 350 kPa for true mains pressure operation to be achieved.

ABOUT YOUR WATER HEATER

WATER HEATER APPLICATION

This water heater is designed for use in a single-family domestic dwelling for the purpose of heating potable water. Its use in an application other than this may shorten its life. This water heater complies with the Lead Free requirements of the National Construction Code Volume Three.

MODEL TYPE

Your Rheem® air sourced heat pump water heater is designed for outdoor installation only. The model you have chosen is the 571D270 and is recommended for connection to an uninterrupted 24 hour continuous tariff power supply. Depending upon the size of the household and its hot water requirements and if the Electricity Retailer permits, an extended off-peak (overnight and day) or Extended time-controlled power supply connection of a minimum 16 hours per day may also be suitable.

A Rheem heat pump water heater consumes less energy than an electric water heater. The impact on an electricity account will depend on the tariff arrangement of the water heater replaced and where you live. Contact your energy provider for more information on tariff arrangements and cost comparisons.

The Rheem air sourced heat pump water heater has a vitreous enamel lined steel cylinder. The water heater's evaporator absorbs heat from the surrounding air and transfers this heat into the water.

When hot water is drawn off and cold water enters the tank, a sensor activates a fan, a compressor and the heat pump control system. The fan draws outside air in through the air inlet louvres at the top of the water heater. Heat is absorbed from the air by an evaporator and transferred into the water through a heat exchanger wrapped around the water heater cylinder. The resulting cold air is then discharged through the air outlet louvres back to atmosphere. This process continues while ever heating is required until the water in the storage tank reaches a temperature of 60°C.

Even on cloudy or cold days, heat is drawn from the surrounding air. The heat pump will operate when the ambient air temperature is from -5°C to 43°C. The electric heating unit will operate when the ambient air temperature falls below -5°C or rises above 43°C if heating is required. The efficiency of the water heater increases as the surrounding ambient air temperature increases.

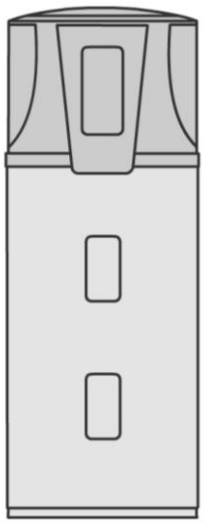

Automatic safety controls are fitted to the water heater to provide safe and efficient operation.

ELECTRIC BOOSTING

Ice may begin to form on the evaporator reducing the heat pump efficiency, when the ambient air temperature falls below 7°C and the heat pump has been operating for an extended period. If the heat pump operates between -5°C and 7°C for longer than 3 hours 20 minutes, the electric heating unit will turn on to assist in the heating of the water. At ambient air temperatures below -5°C, the water heater deactivates the heat pump operation and switches to the electric heating unit. During these periods the evaporator will defrost if necessary.

When operating at a temperature outside of the heat pump's operating range, the heated water capacity is 195 litres. The water will be heated to a temperature of 60°C by the electric heating unit if heating is required. The temperature setting of the sensor controlling the electric heating unit is not adjustable and is set at 60°C.

FREEZE PROTECTION

The water heater has an active de-frost function so the heat pump operates automatically to remove ice from its evaporator coil when the ambient air temperature is between -5 °C and 7°C. The water heater also has a freeze protection function built in for extremely cold conditions. When the water heater is placed into Vacation Mode at the Display Panel and power supply is available to the water heater, either the heat pump operates or the electric heating unit is used to maintain a minimum tank water temperature above 10°C.

The water heater has NO WARRANTY for freeze damage if power is unavailable at the water heater.

⚠ **Warning:** In areas where the ambient air temperature may fall below 4°C, power must be available to the water heater at all times.

HOW HOT SHOULD THE WATER BE?

The heat pump is designed to operate until a water temperature of 60°C is reached. If heating is required and the ambient air temperature is outside of the heat pump's operating range, the water temperature is boosted automatically to 60°C by the electric heating unit.

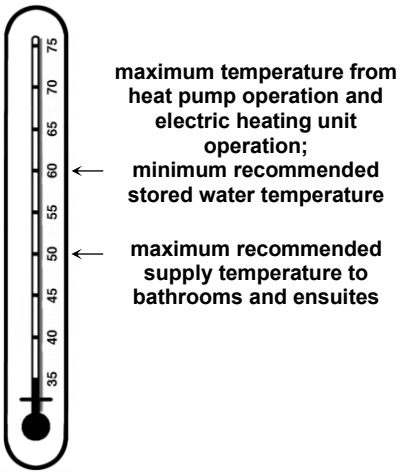

Australian Standard AS/NZS 3500.4 'Plumbing and drainage – Heated water services' requires a water heater to store water at a temperature not less than 60°C or the water heater to satisfy the requirements of Australian Standard AS 3498, to inhibit the growth of legionella bacteria.

If a Timer period is set or the heat pump is connected to an Extended time-controlled power supply, this water heater meets these requirements provided the heat pump is energised for a sufficient period of time each day. Refer to "Timer Control" on page 12.

HOTTER WATER INCREASES THE RISK OF SCALD INJURY

⚠ **Warning**: This water heater can deliver hot water at temperatures up to 60°C, sufficiently hot to cause severe scalding. Water at this temperature may have been plumbed to fixtures where water hotter than 50°C is allowed, such as the kitchen and laundry.

Check the water temperature before use, such as when entering a shower or filling a bath or basin, to ensure it is suitable for the application and will not cause scald injury.

We recommend and it may also be required by regulations that an approved temperature limiting device be fitted into the hot water pipe work to the bathroom and ensuite when this water heater is installed. This will keep the water temperature below 50°C at the bathroom and ensuite. The risk of scald injury will be reduced and still allow hotter water to the kitchen and laundry.

TEMPERATURE ADJUSTMENT

The thermostat and sensors controlling the heat pump and the electric heating unit are factory set and not adjustable.

HEAT PUMP OPERATION

The heat pump may take up to 5 minutes to commence operating when the power supply is switched on. The heat pump will only operate when:

- power is available at the water heater, and
- the water in the storage tank requires heating, and
- the water temperature in the lower part of the water heater is 39°C or less.

If the ambient air temperature is below -5°C or above 43°C and the system calls for heating, the heat pump will not operate, and the electric heating unit will operate instead.

When the heat pump is operating, the system may switch to the electric heating unit if it detects that the ambient air temperature is below the minimum operating temperature of -5°C or above the maximum operating temperature of 43°C. It may also switch back to heat pump operation from the electric heating unit if it detects the ambient air temperature has moved back to within the heat pump's operating temperature range.

Note: The heat pump may not turn on after having just completed a heating cycle and more hot water is drawn from the water heater, or whilst the heat pump was operating and either power was switched off or it was turned "Off" at the Display Panel. The heat pump will wait at least 3 minutes before operating and the conditions for start-up are favourable.

DISPLAY PANEL AND USER CONTROLLED FUNCTIONS

The water heater has a display panel to indicate the status of the water heater. The Display Panel also allows the user to select certain settings, such as Timer Control, Vacation Mode and Manual Electric Heating. Refer to "Display Panel" on page 14.

TIMER CONTROL

A Timer function on the Display Panel allows the hours of operation of the water heater to be set during one or two timed periods in a 24-hour period. Refer to "Timer" on page 21.

It may be desirable to operate the water heater during daytime hours when the air temperature is warmer and the heat pump is more efficient, or not to operate between certain hours, such as during peak energy demand periods of a Time of Use electricity supply when more expensive tariffs may apply.

If the water heater is set to run during one or two timed periods, the heat pump and the electric heating unit will not operate outside of this timed period under Standard Heating operation. It is therefore necessary for the hours of operation set by the Timer to be sufficient to heat up the full volume of water in the tank from cold to 60°C. The hours of operation sufficient to achieve this will depend on various factors, including the climate and amount of hot water used during the period in which the Timer operates. As a guide, for this water heater this can be up to six (6) hours in a cold climate in winter (if no hot water is used during this period). If hot water is used, the hours of operation set by the Timer may need to be increased.

Notes

- The 571D270 model water heater is recommended for connection to an uninterrupted 24 hour continuous tariff power supply. Depending upon the size of the household and its hot water requirements and if the Electricity Retailer permits, an extended off-peak (overnight and day) or Extended time-controlled power supply connection of a minimum 16 hours per day may also be suitable.
- If there is a risk of freezing conditions, the electrical supply to the water heater should not be switched off, otherwise damage could result (refer to "Freeze Protection" on page 10).

PRECAUTIONS

The water heater must be maintained in accordance with the Owner's Guide and Installation Instructions. Refer to "Maintenance Requirements" on page 30 and to "Anode Inspection and Replacement" on page 33.

If this water heater is to be used where an uninterrupted hot water supply is necessary for your application or business you should ensure that you have back-up redundancy within the hot water system design. This should ensure the continuity of hot water supply in the event that this water heater were to become inoperable for any reason. We recommend you seek advice from your plumber or specifier about your needs and building back-up redundancy into your hot water supply system.

TO TURN OFF THE WATER HEATER

If it is necessary to turn off the water heater:

- Switch off the electrical supply at the water heater isolating switch on the switchboard or at the isolating switch at the water heater.
- Close the cold water isolation valve at the inlet to the water heater.

Note: If there is a risk of freezing conditions, the electrical supply to the water heater should not be switched off, otherwise damage could result (refer to "Freeze Protection" on page 10).

TO TURN ON THE WATER HEATER

- Open the cold water isolation valve fully on the cold water line to the water heater.
- Switch on the electrical supply at the water heater isolating switch on the switchboard and at the isolating switch at the water heater.
- Check and if required reset the Timer function on the Display Panel.

Note: When the electrical supply is switched on, there will be a knocking sound coming from the heat pump for a short period of time. This is the electronic expansion valve operating. This is normal and not a fault with the heat pump.

GOING ON HOLIDAYS

If you plan to be away from home for a few nights, we suggest you leave the water heater switched on.

If you plan to be away for a longer period, you can conserve energy by placing the water heater into Vacation Mode at the Display Panel. The heat pump and electric heating unit are prevented from operating under standard heating conditions. The electrical supply remains available to the water heater. Refer to "Vacation Mode" on page 24.

It is not advised to switch off the water heater at the isolating switch if there is the risk of freeze conditions. Refer to "To Turn Off The Water Heater" on page 12.

VICTORIAN CUSTOMERS

Notice to Victorian Customers from the Victorian Building Authority. This water heater must be installed by a licensed person as required by the Victorian Building Act 1993.

Only a licensed person will give you a Compliance Certificate, showing that the work complies with all the relevant Standards. Only a licensed person will have insurance protecting their workmanship for 6 years. Make sure you use a licensed person to install this water heater and ask for your Compliance Certificate.

DOES THE WATER CHEMISTRY AFFECT THE WATER HEATER?

The water heater is suitable for most public water supplies, however some water chemistries may have detrimental effects on the water heater, its components and fittings. Refer to "Water Supplies" on page 32.

If you are in a known harsh water area or you are not sure of your water chemistry, have your water checked against the conditions described on pages 32 to 34.

HOW LONG WILL THE WATER HEATER LAST?

The water heater is supported by a manufacturer's warranty (refer to page 4). There are a number of factors that will affect the length of service the water heater will provide. These include but are not limited to the water chemistry, the water pressure, the water temperature (inlet and outlet) and the water usage pattern. Refer to "Precautions" on page 12.

ENVIRONMENT

At the end of the service life of the heat pump water heater and prior to the water heater being disposed of, a person qualified to work with refrigerants must recover the refrigerant from within the sealed system. The refrigerant must not be vented to atmosphere. Phone Rheem Service or their nearest Accredited Service Agent / Centre to arrange for an inspection.

DISPLAY PANEL

DISPLAY PANEL AND ICONS

The water heater has a Display Panel to allow the user to view the current operational status of the water heater and to enable user input functionality.

Multiple blue and red LEDs on the Display Panel illuminate to display icons which provide information on the water heater's current operational status, water temperatures in the water heater, usable hot water quantity available, Timer function settings, the time and fault codes. The Display Panel also has Selection Keys to enable the user to perform functions such as setting the Timer and change between modes.

The Display icons and Selection Key icons are visible when the Display Panel cover is removed and the Display Panel is illuminated.

A Selection Key icon illuminates blue when its function or mode is turned off and not in use. A Selection Key icon illuminates red when its function or mode is turned on and is in use. Display icons illuminate blue when they are in use.

- Refer to "Display Panel – Display Icons and Keypad Selection Key Icons" on page 16 to view the Display and Selection Key icons which display on the Display Panel.
- Refer to "Illuminating the Display Panel" on page 16 for the procedure to illuminate the Display Panel.
- Refer to "Display and Keypad Selection Key Icons Explained" on page 17 for an explanation of each of the icons.
- Refer to "Display When Electricity Supply is Turned On at the Isolating Switch" on page 15 for an overview of the icons displayed when the electricity supply is switched on to the water heater.

DISPLAY PANEL COVER

The Display Panel has a cover to provide protection to the face of the Display Panel. The cover has to be removed to access the Display Panel and view its display or access the user input and settings functions.

The Display Panel cover has magnets attached. When removed from covering the Display Panel, it can be conveniently placed against the side of the water heater while the Display Panel is being viewed or accessed.

When accessing the Display Panel is complete, it is important to return the cover over the Display Panel to protect the Display Panel.

FUNCTIONS AND MODES OF THE WATER HEATER

Clock Function

The water heater has a clock function to enable the time to be displayed. It is necessary to set the clock to use the Timer setting functions of the water heater. Refer to "Clock" on page 18.

Standard Heating Mode

Standard Heating Mode is the normal day to day operational mode of the heat pump. It is necessary for the heat pump to be "On" at the Display Panel for the heat pump to operate and heat the water. Refer to "Standard Heating Mode" on page 19.

Useable Water Quantity Display

The Display Panel features a Useable Water Quantity display icon. This icon indicates the quantity of usable hot water in the water heater. Refer to "Useable Water Quantity Display" on page 20.

Water Temperature Display

The water temperatures in the upper part and lower part of the water heater display on the Display Panel during certain operational configurations. Refer to "Water Temperature Display" on page 20.

Timer

A Timer function enables two timed periods to be set in a 24 hour period. The Timer is used in conjunction with the Standard Heating Mode to control the times of operation of the heat pump. Refer to "Timer" on page 21.

Vacation Mode

Vacation Mode enables energy to be conserved during a set period, such as when away on holidays. The heat pump and electric heating unit are prevented from operating under standard heating conditions. Refer to "Vacation Mode" on page 24.

Locking the Display Panel

The Display Panel can be locked to prevent unauthorised or accidental adjustments being made. Refer to "Locking the Display Panel" on page 27.

Fault Codes

In the event the water heater develops a fault, a code will display in the Main Display Area This function of the water heater indicates to the user a service call is required. Refer to "Fault Codes" on page 27.

Manual Electric Heating Mode

The water heater has a Manual Electric Heating Mode which allows the electric heating unit to be manually switched on to heat the water. This mode would primarily be used in the event the heat pump develops a fault which prevents the heat pump from operating and heating the water. This mode can be used to provide hot water prior to a service call being made to correct the fault. This mode can also be used to provide additional heating of the water outside of a Timer set period if additional hot water is required. Refer to "Manual Electric Heating Mode" on page 28.

DISPLAY WHEN ELECTRICITY SUPPLY IS TURNED ON AT THE ISOLATING SWITCH

Note: When the electrical supply is switched on, there will be a knocking sound coming from the heat pump for a short period of time. This is the electronic expansion valve operating. This is normal and not a fault with the heat pump.

When the electricity supply is switched on to the water heater at the water heater isolating switch:

- All icons on the display panel illuminate blue. After two (2) seconds the Selection Key icons illuminate red for a further for two (2) seconds. Then all icons on the Display Panel go out.
- After a short initialisation period where a combination of icons illuminate;
  - 'OFF' is displayed in the Main Display Area and the Display icons of previously set functions illuminate blue in the upper part of the Display Panel, and
  - Selection Key icons of previously set functions illuminate red, and
  - Selection Key icons not in use illuminate blue in the lower part of the Display Panel.
- During this short period, inputs from pressing the Selection Keys are ignored by the water heater.

The water heater has a memory function. When the electricity supply is switched on to the water heater after having been switched off, or if electricity is reinstated to the water heater after a time controlled electricity supply period, previous settings including the time remain stored. The water heater and heat pump will return to the programmed state at the time the electricity supply being interrupted.

It is necessary to turn the heat pump "On" at the Display Panel after the electricity supply is switched on to the water heater at the water heater isolating switch for the first time. The heat pump must be "On" at the Display Panel for the heat pump to operate and heat the water.

Note: After one (1) minute of Display Panel inactivity, the illuminated Display and Selection Key icons go out and the Display Panel becomes blank.

DISPLAY PANEL – DISPLAY ICONS AND KEYPAD SELECTION KEY ICONS

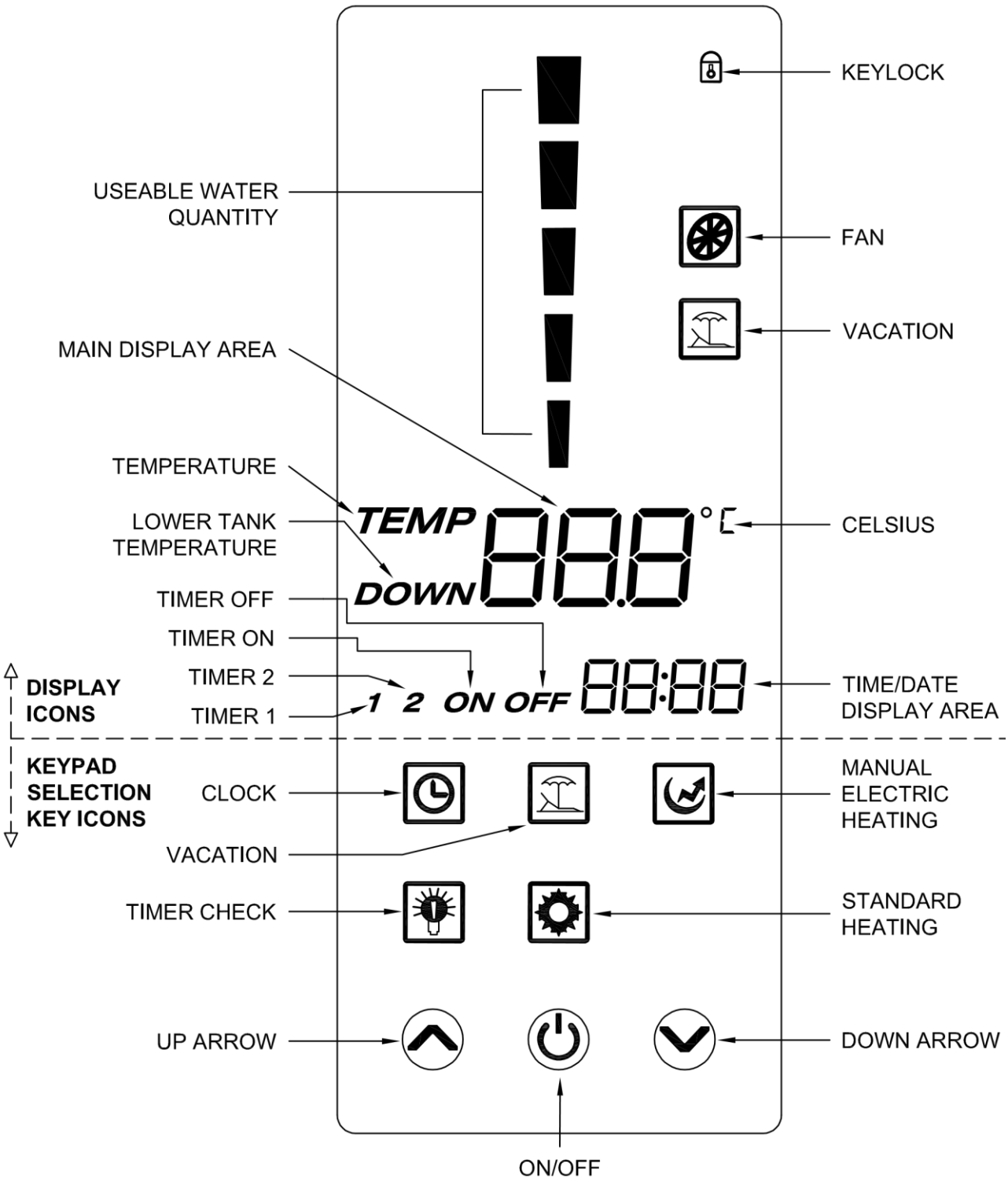

Illuminating the Display Panel

Press the “On / Off” key to illuminate the Display Panel.

- The Display icons of the current set functions and operational status of the water heater illuminate blue in the upper part of the Display Panel.
- The Selection Key icons displaying the current operation and in use illuminate red.
- The Selection Key icons which are not currently in use illuminate blue.

Note: After one (1) minute of Display Panel inactivity, the illuminated Display and Selection Key icons go out and the Display Panel becomes blank.

Display and Keypad Selection Key Icons Explained

Icon Keys	Description
	Useable Water Quantity Icon: displays quantity of usable hot water in the water heater, illuminating blue. The display ranges from the illumination of five bars, which indicates the water heater is full of hot water, to no illumination of bars, which indicates the temperature of all of the water in the water heater is below 35°C.
	Key Lock Icon: illuminates blue when the Display Panel is locked
	Fan Display Icon: illuminates blue when the heat pump and the fan are operating.
	Vacation Mode Display Icon: illuminates blue when Vacation Mode is on.
TEMP	**Temperature Icon:** illuminates blue when the water temperature in the upper part of the water heater is displayed in the Main Display Area.
DOWN	**Lower Tank Temperature Icon:** illuminates blue when the water temperature in the lower part of the water heater is displayed in the Time / Date Display Area.
88.8	**Main Display Area:** illuminates blue and displays the water temperature in the upper part of the water heater or 'OFF' depending upon the operational status of the water heater.
°C	**Celsius Icon:** illuminates blue when the Main Display Area displays the water temperature.
1 2 ON OFF	**Timer Icons:** each icon illuminates blue after; the first and / or second Timer period is programmed, either '1' or '2' or both, and a Timer or Vacation period is set, either 'ON' or 'OFF' or both.
88:88	**Time / Date Display Area:** illuminates blue and displays the time or date or water temperature in the lower part of the water heater, depending upon the operational status of the water heater.
	Clock Key: used to set the clock and the Timer settings. Illuminates red when Timer periods are set. Illuminates blue when no Timer periods are set.
	Vacation Mode Key: used to switch the Vacation Mode on and off. Illuminates red when the mode is on and illuminates blue when the mode is off.
	Manual Electric Heating Mode Key: used to switch the Manual Electric Heating Mode On and Off. Illuminates red when the mode is on and illuminates blue when the mode is off.
	Timer Check Key: Illuminates blue and is used to check the Timer settings.
	Standard Heating Mode Key: used to switch the Standard Heating Mode on and off. Illuminates red when the mode is on and illuminates blue when the mode is off.
	Up Arrow Key: used to increase variable values or move between displays.
	On / Off Key:** used to switch the heat pump "On" or "Off" at the Display Panel.
	Down Arrow Key: used to decrease variable values or move between displays.

**** Note – On / Off Key:** The On / Off key only turns the heat pump "Off" at the Display Panel. It does not switch off or isolate the electricity supply to the water heater or Display Panel. If it is necessary to switch off the electricity supply to the water heater, then this must be done at the water heater isolating switch on the switchboard or at the isolating switch at the water heater.

CLOCK

The water heater has a clock function. The clock must be set in order to use the Timer setting functions of the water heater. The clock can be set whether the heat pump is “On” or “Off” at the Display Panel.

The setting of the clock includes year, month, day, hour and minutes. Once the clock is set, the time in hours and minutes is displayed in the Time / Date Display Area.

The clock is a 24 hour clock, i.e. if the time is 3:30PM, it will show as 15:30 on the clock.

If there is a period of inactivity of 10 seconds during the setting of the clock, the Display Panel exits the clock programming and the display reverts to the time which has been set to that point.

- **To set the clock**
  - Press the “Clock” key.

    The hour digits in the Time / Date Display Area commence to flash.

    A colon separates the hour digits (on left) and minute digits (on right) on the display.
  - Press the "Up" key or "Down" key to select the hour digits.
  - Press the “Clock” key to save the hour digits.

    The minute digits commence to flash.
  - Press the "Up" key or "Down" key to select the minute digits.
  - Press the “Clock” key to save the minute digits.

    The month digits commence to flash.
    (the months are represented numerically, i.e. 01 to 12)

    A single dot separates the month digits (on left) and day digits (on right) on the display.
  - Press the "Up" key or "Down" key to select the month digits.
  - Press the “Clock” key to save the month digits.

    The day digits commence to flash.
    (The day is represented by the date within the month, i.e. 01 to 31)
  - Press the "Up" key or "Down" key to select the day digits.
  - Press the “Clock” key to save the day digits.

    The month and day digits are replaced by four digits representing the year and commencing with 20. The last two digits of the year commence to flash.

    There is no colon or dot separating the first two digits and last two digits of the year on the display.
  - Press the "Up" key or "Down" key to select the year digits.
  - Press the “Clock” key to save the year digits.

    The time is displayed in the Time / Date Display Area.

    The clock is now set.

STANDARD HEATING MODE

Standard Heating Mode is the normal day to day operational mode of the heat pump. The heat pump will operate when heating of the water is required, and there is an electricity supply to the water heater, and the heat pump is turned “On” at the Display Panel, and the water temperature in the bottom part of the water heater is 39°C or lower. The heat pump must be “On” at the Display Panel for the heat pump to operate and heat the water.

Standard Heating Mode must be turned on and the “Standard Heating” key illuminated red for the heat pump to operate.

If the “Standard Heating” key is illuminated blue:

- Press the “Standard Heating” key.

  The “Standard Heating” key illuminates red.

  Standard Heating Mode has been turned on.

Timer periods can be set to control the hours of operation of the heat pump. Refer to “Timer” on page 21.

A set Timer period can be manually overridden. To override the Timer during a Timer ‘OFF’ period:

- Press and hold the “On / Off” key for 2 to 3 seconds to turn the heat pump “On” at the Display Panel.

  The heat pump will remain “On” at the Display Panel until the end of the next Timer period.

If the electricity supply is switched off or is interrupted to the water heater whilst the heat pump is “On” at the Display Panel, when the electricity is switched on or reconnected again, the heat pump will revert to “On” at the Display Panel, unless the time is outside of a Timer 1 or Timer 2 set period. At the commencement of the next Timer period the heat pump will automatically turn “On” at the Display Panel.

During normal day to day operation of the water heater, it is not necessary to turn the heat pump “Off” at the Display Panel. It is necessary though to turn the heat pump “Off” at the Display Panel to complete or activate particular user function settings. It is also necessary to then turn the heat pump back “On” at the Display Panel after the completion of these user function settings.

TURNING THE HEAT PUMP “ON” OR “OFF” AT THE DISPLAY PANEL

- **To turn the heat pump “On” at the Display Panel:**
  - Press and hold the “On / Off” key for 2 to 3 seconds.

    The ‘TEMP’ icon illuminates.

    The water temperature in the upper part of the water heater illuminates in the Main Display Area.

    The Useable Water Quantity icon bars illuminate (if the water is hot).

    The Display icons of the current set functions illuminate blue.

    The Selection Key icons displaying the current operation and in use illuminate red.

    The Selection Key icons which are not currently in use illuminate blue.

- **To turn the heat pump “Off” at the Display Panel:**
  - Press and hold the “On / Off” key for 2 to 3 seconds.

    The ‘TEMP’ icon, water temperature display and Useable Water Quantity icon bars go out.

    ‘OFF’ illuminates in the Main Display Area.

    The Display icons of the current set functions illuminate blue.

    The Selection Key icons displaying the current operation and in use illuminate red.

    The Selection Key icons which are not currently in use illuminate blue.

    If the heat pump was operating, the fan may continue to run for up to one (1) minute.

USEABLE WATER QUANTITY DISPLAY

The Display Panel features a Useable Water Quantity display icon. This icon indicates the quantity of usable hot water in the water heater.

The display ranges from the illumination of five bars, which indicates the water heater is full of hot water, to no illumination of bars, which indicates the temperature of the water in the water heater is below 35°C. The number of bars is calculated from the water temperature in both the upper part and lower part of the water heater.

5 bars	temperature greater than 56°C
4 bars	average temperature 50°C
3 bars	average temperature 45°C
2 bars	average temperature 40°C
1 bar	average temperature 35°C
0 bars	temperature less than 35°C

Note: Where an average water temperature is shown in this table, the actual water temperature may be hotter in the upper part or cooler in the lower part of the water heater, by up to 10°C or even more on occasion, depending upon the amount of hot water draw off and the stage of heating by the heat pump.

WATER TEMPERATURE DISPLAY

The water temperatures in both the upper part and lower part of the water heater display on the Display Panel when the heat pump is “On” at the Display Panel.

- Press the “On / Off” key to illuminate the Display Panel.
- If ‘OFF’ is displayed in the Main Display Area, press and hold the “On / Off” key for 2 to 3 seconds to turn the heat pump “On” at the Display Panel.
- **Upper Water Heater Temperature Display**

  The ‘TEMP’ icon illuminates.

  The water temperature in the upper part of the water heater is displayed in the Main Display Area.
- **Lower Water Heater Temperature Display**

  The temperature of the water in the lower part of the water heater is displayed in the Time / Date Display Area for 10 seconds when the Display Panel illuminates after having been off.

  The ‘DOWN’ icon illuminates during this 10 second period.

  The time will display after the 10 seconds has elapsed, or if the “On / Off” key is pressed within the 10 second period.

  - To view the water temperature in the lower part of the water heater at other times and when the heat pump is “On” at the Display Panel:

    - Press and hold the “Down Arrow” key until the ‘DOWN’ icon illuminates. This will take 2 seconds.

      The water temperature in the lower part of the water heater displays in the Time / Date Display Area for 10 seconds.

      The ‘DOWN’ icon and the temperature display will go out and the time will display after the 10 seconds has elapsed, or if the “On / Off” key is pressed within the 10 second period.

TIMER

The water heater has a Timer function. Two timed periods, Timer 1 and Timer 2, can be set within a 24 hour period. The Timer operates over a 24 hour period, it does not allow for days or months to be programmed.

The Timer is used in conjunction with the Standard Heating Mode to control the times of operation of the heat pump. The heat pump and the electric heating unit will not operate outside of this timed period under Standard Heating Mode operation.

It may be desirable to operate the water heater during daytime hours when the air temperature is warmer and the heat pump is more efficient, or not to operate between certain hours, such as during peak energy demand periods of a Time of Use electricity supply when more expensive tariffs may apply.

The clock is a 24 hour clock, i.e. if the time being set is 3:30PM, it will show as 15:30.

Notes

- It is necessary for the hours of operation set by the Timer to be sufficient to heat up the full volume of water in the tank from cold to its set point of 60°C, to ensure the hot water consumption requirements of the household are met. The hours of operation sufficient to achieve this will depend on various factors, including the climate and amount of hot water used during the period in which the Timer operates. The heat pump will take longer to heat water in the cooler winter months than in the warmer summer months. As a guide, for this water heater this can be up to six (6) hours in a cold climate in winter (if no hot water is used during this period). If hot water is used, the hours of operation set by the Timer may need to be increased.
- A Timer period can be set whether the heat pump is “On” or “Off” at the Display Panel.
- If no Timer period is set, the “Clock” key illuminates blue.
- If there is a Timer period set, the “Clock” key illuminates red, and either the Timer ’1’ or Timer ’2’ or both, and the Timer ‘ON’ and Timer ‘OFF” icons illuminate. These display whether the heat pump is “On” or “Off” at the Display Panel.
- If the Timer is set and the scheduled power ON and scheduled power OFF times are the same, the scheduled power OFF setting will over-ride the scheduled power ON setting. The heat pump will remain “Off” at the Display Panel.
- If there is no action for 10 seconds during the setting of the Timer period, the programmed Timer setting will be saved. The Timer ’1’, Timer ’2’ (if set), Timer ’ON’ and Timer ’OFF’ icons illuminate, and the time is displayed in the Time / Date Display Area.
- Timer period(s) cannot be set if Vacation Mode is turned on, i.e. the “Vacation” key is illuminated red and the Vacation display icon is illuminated blue.

Checking a Timer Setting(s)

- **To check a current Timer Setting(s):**
  - Press and hold the “Timer Check” key until the Timer ’1’ icon commences to flash. This will take 2 seconds.

    The Timer ’1’ and Timer ’ON’ icons illuminate and flash, and the Timer 1 ON time is displayed in the Time / Date Display Area for 2 seconds, and then

    The Timer ’1’ and Timer ’OFF’ icons illuminate and flash, and the Timer 1 OFF time is displayed in the Time / Date Display Area for 2 seconds, and then

    The Timer ’2’ and Timer ’ON’ icons illuminate and flash, and the Timer 2 ON time is displayed in the Time / Date Display Area for 2 seconds, and then

    The Timer ’2’ and Timer ’OFF’ icons illuminate and flash, and the Timer 2 OFF time is displayed in the Time / Date Display Area for 2 seconds, and then this cycle is repeated.
  - Pressing the “Up” or “Down” key during this cycle will revert to the previous or skip to the next Timer setting display.
  - The display will return to the main interface either after a press of the “On / Off” key or after 20 seconds of the last press of a key icon.
  - The Timer Check function cannot be used if Vacation Mode is turned on, i.e. the “Vacation” key is illuminated red and the Vacation display icon is illuminated blue.

Timer 1 Setting

- **To set the Timer 1 ON setting;**
  - Press and hold the “Clock” key until the Timer ’1’ icon commences to flash. This will take 2 seconds.

    The “Clock” key illuminates red.

    The Timer ’ON’ icon and either “- - : - -“ or the previously set ON time in the Time / Date Display Area illuminate.
  - Press the “Clock” key.

    “- -“ or the previously set ON hour digits for the Timer 1 setting commence to flash in the Time / Date Display Area.

    The Timer ’1’ icon changes from flashing to a solid illumination.
  - Press the "Up" key or "Down" key to select the ON hour.
  - Press the “Clock” key to save the ON hour.

    The previously set minute digits commence to flash.
  - Press the "Up" key or "Down" key to select the ON minutes.

    The minutes change in increments of 10 minutes.
  - Press the “Clock” key to save the ON minutes.

    The Timer ’ON’ icon goes out, and the Timer ’OFF’ icon illuminates.

    “- -“ or the previously set OFF hour digits for the Timer 1 setting commence to flash in the Time / Date Display Area.

- **To set the Timer 1 OFF setting;**
  - While “- -“ or the previously set OFF hour digits are flashing, press the "Up" key or "Down" key to select the OFF hour.
  - Press the “Clock” key to save the OFF hour.

    The previously set minute digits commence to flash.
  - Press the "Up" key or "Down" key to select the OFF minutes.

    The minutes change in increments of 10 minutes.
  - Press the “Clock” key to save the OFF minutes.

    The Timer 1 period is now set.

    The Timer ’2’ icon commences to flash.

    The Timer ’ON’ icon and either “- - : - -“ or the previously set Timer 2 ON time in the Time / Date Display Area illuminate.
  - Proceed to program the Timer 2 period if this is required.

    If a Timer 2 period is not required to be set or reset, then 10 seconds after the Timer 1 period having been set, the water heater will exit Timer programming and the Display Panel will return to the main interface, and:
    - The “Clock” key remains illuminated red.
    - The Timer ’1’, Timer ’2’ (if set), Timer ’ON’ and Timer ’OFF’ icons illuminate, and the time is displayed in the Time / Date Display Area.

Timer 2 Setting

The Timer 2 period can be set either immediately after setting the Timer 1 period or independently of setting the Timer 1 period.

- **To set the Timer 2 period immediately after setting the Timer 1 period;**

  The Timer ’2’ icon will be flashing after having set the Timer 1 OFF minutes.

  The Timer ’ON’ icon and either “- - : - -“ or the previously set Timer 2 ON time in the Time / Date Display Area will illuminate.

  - Press the “Clock” key.

    “- -“ or the previously set ON hour digits for the Timer 1 setting will commence to flash in the Time / Date Display Area.

    The Timer ’2’ icon will change from flashing to a solid illumination.

  - Follow the procedure as outlined in setting the Timer 1 period. The Timer ’2’ icon will flash or illuminate instead of the Timer ’1’ icon during the setting procedure.

  - After the “Clock” key is pressed to save the OFF minutes for the Timer 2 period;

    The Timer ’1’, Timer ’2’, Timer ’ON’ and Timer ’OFF’ icons illuminate, and the time is displayed in the Time / Date Display Area.

- **To set the Timer 2 period independently of the Timer 1 period;**

  - Press and hold the “Clock” key until the Timer ’1’ icon commences to flash. This will take 2 seconds.

    The Timer ’ON’ icon and either “- - : - -“ or the previously set ON time in the Time / Date Display Area illuminate.

  - Press the “Up” or “Down” key.

    The Timer ’2’ icon commences to flash.

    The Timer ’ON’ icon and either “- - : - -“ or the previously set Timer 2 ON time in the Time / Date Display Area illuminate.

  - Follow the procedure as outlined in setting the Timer 1 period. The Timer ’2’ icon will flash or illuminate instead of the Timer ’1’ icon during the setting procedure.

  - After the “Clock” key is pressed to save the OFF minutes for the Timer 2 period;

    The Timer ’1’, Timer ’2’, Timer ’ON’ and Timer ’OFF’ icons illuminate, and the time is displayed in the Time / Date Display Area.

Cancelling a Timer Setting

- **To cancel the Timer setting:**

  - Press and hold the “Clock” key until the Timer ’1’ icon commences to flash. This will take 2 seconds.

    The “Clock” key illuminates red.

    The Timer ’ON’ icon and the ON time in the Time / Date Display Area illuminate.

  - Press the ON/OFF key.

    The “Clock” key illuminates blue.

    All Timer settings are cancelled.

VACATION MODE

In Vacation Mode, to conserve energy, the heat pump and electric heating unit will not operate under standard heating conditions. The heat pump and electric heating unit will only operate under very cold conditions if the tank water temperature approaches freezing conditions.

The Vacation Mode period is based on full days, i.e. the start time or finish time is at midnight on the morning of the start date or finish date of the Vacation period.

The Vacation Mode has two separate methods of use. Only one method can be used at one time.

Method 1 – Set a start date for the Vacation period.

This method allows the start date to be set in advance of the planned start of the Vacation period. This date, i.e., the expected departure date, is the day the heat pump will automatically turn "Off" at the Display Panel. The heat pump must be manually turned back "On" at the Display Panel upon the return from Vacation.

Refer to "Method 1 – Setting the start date of the Vacation period" on page 25 for the procedure to set the start date of Vacation Mode.

Before the Vacation start date is reached, Vacation Mode is on and the heat pump is "On" at the Display Panel, the Timer 'OFF' icon is illuminated, and the scheduled Vacation Mode start date is displayed in the Time / Date Display Area. During this period, the heat pump will operate in Standard Heating Mode when heating of the water is required.

When the Vacation Mode start date is reached, the heat pump turns "Off" at the Display Panel. The "Standard Heating" key illuminates red, the "Vacation" key illuminates blue. The Vacation display icon, Timer 'OFF' icon and the Vacation Mode start date go out. The time is displayed in the Time / Date Display Area.

Method 2 – Set a finish date for the Vacation period.

This method allows a finish date to be set for the Vacation period. This date, i.e. the expected return date, is the day the heat pump will automatically turn back "On" at the Display Panel and recommence heating of the water. The heat pump must be manually turned "Off" at the Display Panel prior to leaving for Vacation. This can be achieved when the Vacation finish date is set.

Refer to "Method 2 – Setting the finish date of the Vacation period" on page 26 for the procedure to set the finish date of Vacation Mode.

Before the Vacation finish date is reached, Vacation Mode is on and the heat pump is "Off" at the Display Panel, the Timer 'ON' icon is illuminated and the scheduled Vacation Mode finish date is displayed in the Time / Date Display Area.

When the Vacation Mode finish date is reached, the heat pump turns "On" at the Display Panel. The "Standard Heating" key illuminates red and the "Vacation" key illuminates blue. The Vacation display icon, Timer 'ON' icon and the Vacation Mode finish date go out. The time is displayed in the Time / Date Display Area.

Notes

- Vacation Mode turns on at the completion of the procedure to set the start date (method 1) or finish date (method 2). The "Vacation" key is illuminated red and the Vacation display icon is illuminated blue.
- The Timer Check and Timer setting functions are disabled whilst the Vacation Mode is turned on, i.e. "Vacation" key is illuminated red and Vacation display icon is illuminated blue.
- The Manual Electric Heating Mode cannot be turned on whilst Vacation Mode is turned on.
- Whether the heat pump is "On" or "Off" at the Display Panel, pressing the "Vacation" key whilst the Vacation Mode is on, i.e. "Vacation" key is illuminated red and Vacation display icon is illuminated blue, reverts the display to the Vacation Mode setting procedure. After 10 seconds of inactivity, the display reverts back to the previous Vacation Mode date settings.

Setting the Vacation Mode

- **Method 1 – Setting the start date of the Vacation period, the heat pump must be “On” at the Display Panel.**

  - Press the “Vacation” key

    The “Vacation” key illuminates red and the “Vacation” display icon illuminates blue.

    The “Standard Heating” key illuminates blue.

    The Timer ’OFF’ icon illuminates.

    The month digits commence to flash.
    (the month and day are displayed numerically in the Time / Date Display Area).

    Note: A single dot separates the month digits on the left and the day digits on the right of the display.

  - Press the “Up” key or "Down" key to select the month digits of the Vacation start period.
    (the months are represented numerically, i.e. 01 to 12)

  - Press the "Vacation" key to save the month digits.

    The day digits commence to flash.
    (The day is represented by the date within the month, i.e. 01 to 31)

  - Press the "Up" key or "Down" key to select the day of the Vacation start period.

  - Press the "Vacation" key to save the day digits.

    The month and day digits are replaced by four digits representing the year and commencing with 20.
    The last two digits of the year commence to flash.

    Note: There is no dot separating the first two digits and last two digits of the year on the display.

  - Press the "Up" key or "Down" key to select the year of the Vacation start period.

  - Press the "Vacation" key to save the year digits.

  - The Vacation start date of the Vacation Mode is now set.

    The Timer ’OFF’ icon remains illuminated and the month and day of the start date illuminate.

    The “Vacation” key remains illuminated red and the “Vacation” display icon remains illuminated blue.

  - The heat pump will turn “Off” at the Display Panel at midnight on the morning of the start date.

  - When you return from ‘Vacation’, turn the heat pump “On” at the Display Panel.

    - Press the “On/Off” key for 2 to 3 seconds to turn the heat pump “On” at the Display Panel.

- **Method 2 – Setting the finish date of the Vacation period, the heat pump must be “Off” at the Display Panel.**
  - Press the “On/Off” key for 2 to 3 seconds to turn the heat pump “Off” at the Display Panel.

    ‘OFF’ illuminates in the Main Display Area.
  - Press the “Vacation” key.

    The “Vacation” key illuminates red and the “Vacation” display icon illuminates blue.

    The “Standard Heating” key illuminates blue.

    The Timer ’ON’ icon illuminates.

    The month digits commence to flash.
    (the month and day are displayed numerically in the Time / Date Display Area).
  - Press the “Up” key or "Down" key to select the month digits of the Vacation finish period.
  - Press the "Vacation" key to save the month digits.

    The day digits commence to flash.
  - Press the "Up" key or "Down" key to select the day of the Vacation finish period.
  - Press the "Vacation" key to save the day digits.

    The last two digits of the year commence to flash.
  - Press the "Up" key or "Down" key to select the year of the Vacation finish period.
  - Press the "Vacation" key to save the year digits.
  - The Vacation finish date of the Vacation Mode is now set.

    The heat pump remains “Off” at the Display Panel.

    The Timer ’ON’ icon remains illuminated and the month and day of the finish date illuminate.

    The “Vacation” key remains illuminated red and the “Vacation” display icon remains illuminated blue.
  - The heat pump will turn “On” at the Display Panel at midnight on the morning of the finish date, or when power is available to the water heater if connected to a time controlled electricity supply.

  - When you leave for ‘Vacation’ and if the heat pump had been tuned back “On” at the Display Panel after setting the finish date, it is necessary to turn the heat pump “Off” at the Display Panel.
    - Press the “On/Off” key for 2 to 3 seconds to turn the heat pump “Off” at the Display Panel.

      ‘OFF’ illuminates in the Main Display Area.

      The Timer ’ON’ icon and the month and day of the Vacation finish date remain illuminated.

      Ensure the “Vacation” key is illuminated red.

LOCKING THE DISPLAY PANEL

The Display Panel can be locked to prevent unauthorised or accidental adjustments being made.

- **To lock the Display Panel:**
  - Press and hold the "On/Off" key until the “Key Lock” icon illuminates. This will take 5 seconds.

    The Display Panel is locked.

When the Display Panel is locked, pressing a Selection Key will not initiate a function.

- **To unlock the Display Panel:**
  - Press and hold the "On/Off" key until the “Key Lock” icon goes out. This will take 5 seconds.

    The Display Panel is unlocked.

Notes:

- If a system fault arises whilst the Display Panel is locked, the Display Panel lock is automatically released.
- Upon the servicing / removal of a fault, the Display Panel returns to the state it was in prior to the fault.
- In the instance the Display Panel is locked when a fault occurs, it will revert to being locked when the fault is serviced / removed.

FAULT CODES

The Main Display Area will display a code in the event the water heater develops a fault.

The fault codes which may appear are:

- P01, P02, P03, P04, P05, P06, P07
- E01, E08

If there is more than one fault, the additional fault codes can be viewed.

- Press the “Up Arrow” or “Down Arrow” key whilst a fault code is displayed.

  The additional fault code(s) will display in the Main Display Area.

An E01 fault may be able to be reset.

- Press and hold the “On / Off” key for 10 seconds to attempt to reset the E01 fault.

  If the E01 fault can be reset, the fault code will go out and display returns to the main interface display.

  If the E01 fault code appears again when the heat pump attempts to operate, then a service call is required.

If one of the above codes is displayed on the Display Panel or if an E01 code appears again after having been reset, make a note of the fault code and phone Rheem Service or their nearest Accredited Service Agent / Centre to arrange for an inspection.

Back in hot water: Press the “On / Off” key to return the display to the main interface display from the fault code display. Except where a P02 fault code has occurred, the water heater can still provide hot water until the fault can be serviced. The Manual Electric Heating Mode can be turned on and the water will be heated by the electric heating unit. Refer to “Manual Electric Heating Mode” on page 27.

Note: Code E09 is not a fault code. This code appears if the electric heating unit is operating to prevent the water in the cylinder from freezing in very cold conditions. It will go out when the heating by the electric heating unit has finished.

MANUAL ELECTRIC HEATING MODE

The water heater has a Manual Electric Heating Mode which allows the electric heating unit to be turned on to heat the water. This would primarily be used in the event the heat pump develops a fault which prevents it from operating and heating the water. This mode can be used to provide hot water until a service call is made to correct the fault.

Notes

- The Manual Electric Heating Mode is a ‘one shot’ heating process. The mode automatically turns off when the heating cycle is completed by the electric heating unit.

  This mode may need to be turned on more than once to provide ongoing hot water until the service call is made. A completed heating cycle provides 195 litres of water heated to 60°C.

- To turn on the Manual Electric Heating Mode, the heat pump must be “Off” at the Display Panel and in Standard Heating Mode.

  The Manual Electric Heating Mode cannot be turned on if Vacation Mode is turned on, i.e. the “Vacation” key is illuminated red and the “Vacation” display icon is illuminated blue.

- The Manual Electric Heating Mode can be turned ‘On’ outside of a set Timer period.

- If the Manual Electric Heating Mode is being used because the heat pump has developed a fault and cannot heat, then there is no need to turn the heat pump back ‘On’ at the Display Panel.

  The heat pump only needs to be turned back ‘On’ at the Display Panel after the service call has been made to rectify the fault and the heat pump is in working order.

- **To turn on the Manual Electric Heating Mode setting:**

  - Press and hold the “On / Off” key for 2 to 3 seconds to turn the heat pump “Off” at the Display Panel.

    ‘OFF’ is displayed in the Main Display Area.

    The "Manual Electric Heating” key illuminates blue.

  - Press and hold the "Manual Electric Heating” key for 3 seconds.

    The "Manual Electric Heating” key illuminates red.

    The Manual Electric Heating Mode is now turned on and the electric heating unit will heat the water.

    The Main Display Area alternately displays ‘OFF’ and the water temperature in the upper part of the water heater at intervals of 2 seconds. This sequence continues and the “Manual Electric Heating” key remains illuminated red whilst the water heater remains in “Manual Electric Heating” Mode.

    The time is displayed in the Time / Date Display Area.

- When the Manual Electric Heating Mode turns off automatically:

  ‘OFF’ is displayed in the Main Display Area.

  The water temperature ceases to be displayed.

  The "Manual Electric Heating” key illuminates blue.

  The “Standard Heating” key illuminates red.

- To turn the heat pump “On” at the Display Panel after the service call has been made and the fault rectified or if this mode has been used to provide additional hot water:

  - Press and hold the “On / Off” key for 2 to 3 seconds to turn the heat pump “On” at the Display Panel.

Note: The “Manual Electric Heating” key does not illuminate when the heat pump is “On” at the Display Panel.

- **To manually turn off the Manual Electric Heating Mode setting**
  If it is required to turn off the Manual Electric Heating Mode prior to the heating unit completing its ‘one shot’ heating process:

  - Press and hold the "Manual Electric Heating” key for 3 seconds.

    ‘OFF’ is displayed in the Main Display Area.

    The water temperature ceases to be displayed.

    The "Manual Electric Heating” key illuminates blue.

    The “Standard Heating” key illuminates red.

MAINTENANCE REQUIREMENTS

MINOR MAINTENANCE EVERY SIX MONTHS

It is recommended minor maintenance be performed every six (6) months. Minor maintenance can be performed by the dwelling occupant.

The minor maintenance includes:

- Operate the easing lever on the temperature pressure relief valve. **It is very important the lever is raised and lowered gently.** Refer to "Relief Valves" on page 8.

  ⚠ **Warning:** Water discharged from the temperature pressure relief valve drain line will be hot. Exercise care to avoid any splashing of water by standing clear of the drain line's point of discharge when operating the valve's easing lever.

- Operate the easing lever on the expansion control valve (if fitted). **It is very important the lever is raised and lowered gently.** Refer to "Relief Valves" on page 8.

  If water does not flow freely from the drain line of either the temperature relief valve or expansion control valve when the easing lever is operated, phone Rheem Service or their nearest Accredited Service Agent / Centre to arrange for an inspection.

- The jacket of the water heater can be cleaned with a soft cloth and warm mild soapy water if required. Under no circumstances should abrasive materials or powders be used.

- Inspect around the air inlet and outlet louvres and the water heater in general for plant growth.

  - Trim back any shrubs, bushes or other plants which have encroached around the water heater.

    Plant growth across the air inlet and outlet louvres can interfere with the performance of the water heater.

- Inspect around the water heater for infestations of insects, such as ants. Insects encroaching into or nesting in the water heater can interfere with the operation of the water heater and also damage components. The area around the water heater can be sprayed with insecticide to rid the area of insects.

  ⚠ **Warning:** Do not spray insecticide near the water heater while the heat pump is operating.

  - If necessary to rid the area of insects:

    - Ensure the electrical supply at the power outlet to the water heater has been switched off.
    - Spray the affected are, taking care not to spray into the air inlet or outlet louvres or onto the surface of the water heater.
    - Wait a few minutes to allow any aerosol gases to dissipate before switching on the electrical supply at the power outlet to the water heater.

- Inspect and check the condensate drain hose.

  - Remove the drain hose from the drain spigot towards the rear of the heat pump. Use a garden hose to run water through the drain hose and dislodge any foreign bodies. Reconnect the drain hose to the drain spigot. Ensure the garden hose and drain hose are well clear of the heat pump and its components.

MAJOR SERVICE EVERY FIVE YEARS

It is recommended a major service be conducted on the water heater every five (5) years.

⚠ **Warning**: Servicing of a water heater must only be carried out by qualified personnel. Phone Rheem Service or their nearest Accredited Service Agent / Centre.

Note: The major service and routine replacement of any components, such as the anode and relief valve(s), are not included in the Rheem warranty. A charge will be made for this work. Only genuine replacement parts should be used on this water heater.

The major service includes:

- Replace the temperature pressure relief valve.
- Inspect and flush the expansion control valve (if fitted). If required, replace the valve.
- Inspect and if required, replace the anode.

  If the anode is not replaced, it should be replaced within three years of this service (refer to "Anode Inspection and Replacement" on page 33).
- Check the electric heating unit for excessive calcium build-up or corrosion and replace if necessary.
- Check and clean the heat pump module of dust and residue.
- Check and inspect the heat pump module for operation.
- Visually check the unit for any potential problems.
- Inspect all connections.
- Check the condensate drain.

Note: The water heater may need to be drained during this service. After the completion of the service, the water heater will take some time to reheat the water. Depending upon the power supply connection, hot water may not be available until the next day.

HEAT PUMP SYSTEM

It is recommended the evaporator and refrigeration system is checked every five years. In particularly dusty environments, it may be necessary to have the heat pump system checked and cleaned of dust and residue on a more regular basis.

WATER SUPPLIES

This water heater must be installed in accordance with this advice to be covered by the Rheem warranty.

This water heater is manufactured to suit the water conditions of most public reticulated water supplies. However, there are some known water chemistries which can have detrimental effects on the water heater and its operation and / or life expectancy. If you are unsure of your water chemistry, you may be able to obtain information from your local water supply authority. This water heater should only be connected to a water supply which complies with these guidelines for the Rheem warranty to apply.

CHANGE OF WATER SUPPLY

The changing or alternating from one water supply to another can have a detrimental effect on the operation and / or life expectation of a water heater cylinder, a temperature pressure relief valve and a heating unit.

Where there is a changeover from one water supply to another, e.g. a rainwater tank supply, bore water supply, desalinated water supply, public reticulated water supply or water brought in from another supply, then water chemistry information should be sought from the supplier or it should be tested to ensure the water supply meets the requirements given in these guidelines for the Rheem warranty to apply.

ANODE

The vitreous enamel lined cylinder of the water heater is only covered by the Rheem warranty when the total dissolved solids (TDS) content in the water is less than 2500 mg/L and when the correct colour coded anode is used. If an incorrect colour coded anode is used in the water heater, any resultant faults will not be covered by the Rheem warranty. In addition, the use of an incorrect colour coded anode may shorten the life of the water heater cylinder.

The correct colour coded anode is as shown in the following table:

Total Dissolved Solids	Anode colour code
0 – 40 mg/L	Green
40 – 150 mg/L	Green or Black
150 – 400 mg/L	Black
400 – 600 mg/L	Black or Blue
600 – 2500 mg/L	Blue
2500 mg/L +	Blue (no cylinder warranty)

The changing of anodes must be carried out by a qualified person.

Note: Some water analysis reports may state the conductivity of the water rather than the level of total dissolved solids. Conductivity, measured in microsiemens per centimetre (µS / cm), is directly proportional to the TDS content of the water. TDS, in mg / L, is approximately 70% of the conductivity in µS / cm.

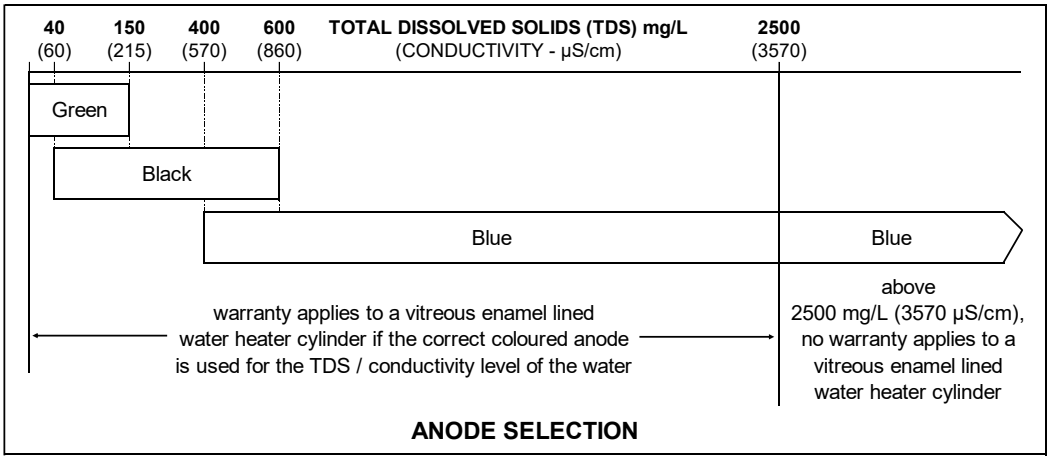

ANODE INSPECTION AND REPLACEMENT

The anode installed in your water heater will slowly dissipate whilst protecting the cylinder. The life of the cylinder may be extended by replacing the anode.

For water supplies which are either softened or desalinated, or where the water supply may alternate between a water tank and a reticulated public supply or another supply, or where there is a variable supply (e.g. from a bore or public reticulated supply from various water sources), the anode must be inspected (and replaced if there is any sign of depletion) within five (5) years of its installation.

For all water supplies, if the anode is not replaced during a major service (refer to "Major Service Every Five Years" on page 31) then the maximum time after installation when the anode should be replaced for this water heater is eight (8) years.

CAUTION

If the water supply has a TDS greater than 150 mg/L and a green anode has not been changed to a black anode, or if the TDS is greater than 600 mg/L and the anode has not been changed to a blue anode, there is the possibility the anode may become overactive and hydrogen gas could accumulate in the top of the water heater during long periods of no use.

If, under these conditions, the water heater has not been used for two or more weeks the following procedure should be carried out before using any electrical appliances (automatic washing machines and dishwashers) which are connected to the hot water supply.

The hydrogen, which is highly flammable, should be vented safely by opening a hot tap and allowing the water to flow. There should be no smoking or naked flame near the tap whilst it is turned on. Any hydrogen gas will be dissipated. This is indicated by an unusual spurting of the water from the tap. Once the water runs freely, any hydrogen in the system will have been released.

SATURATION INDEX

The saturation index (SI) is used as a measure of the water's corrosive or scaling properties. The saturation index figures stated are calculated using a water temperature of 80°C.

In a corrosive water supply, the water can attack copper parts and cause them to fail. Where the saturation index is less than –1.0, the water is very corrosive and the Rheem warranty does not apply to a copper sheathed heating unit. A corrosion resistant heating unit must be used for the Rheem warranty to apply to the heating unit.

In a scaling water supply calcium carbonate is deposited out of the water onto any hot metallic surface. Where the saturation index exceeds +0.40, the water is very scaling. An expansion control valve must be fitted on the cold water line after the non-return valve to protect and for the Rheem warranty to apply to the temperature pressure relief valve and water heater cylinder.

This water heater is manufactured with a low watts density heating unit. Where the saturation index exceeds +0.80, the Rheem warranty does not apply to a standard watts density heating unit. A low watts density heating unit must be used for the Rheem warranty to apply to the heating unit.

Water which is scaling may be treated with a water softening device to reduce the saturation index of the water.

Refer to the Saturation Index chart on page 34. Refer to the cold water connection diagram on page 46 for the position of the expansion control valve.

Contact Rheem Service or their nearest Accredited Service Agent / Centre if a replacement heating unit is required.

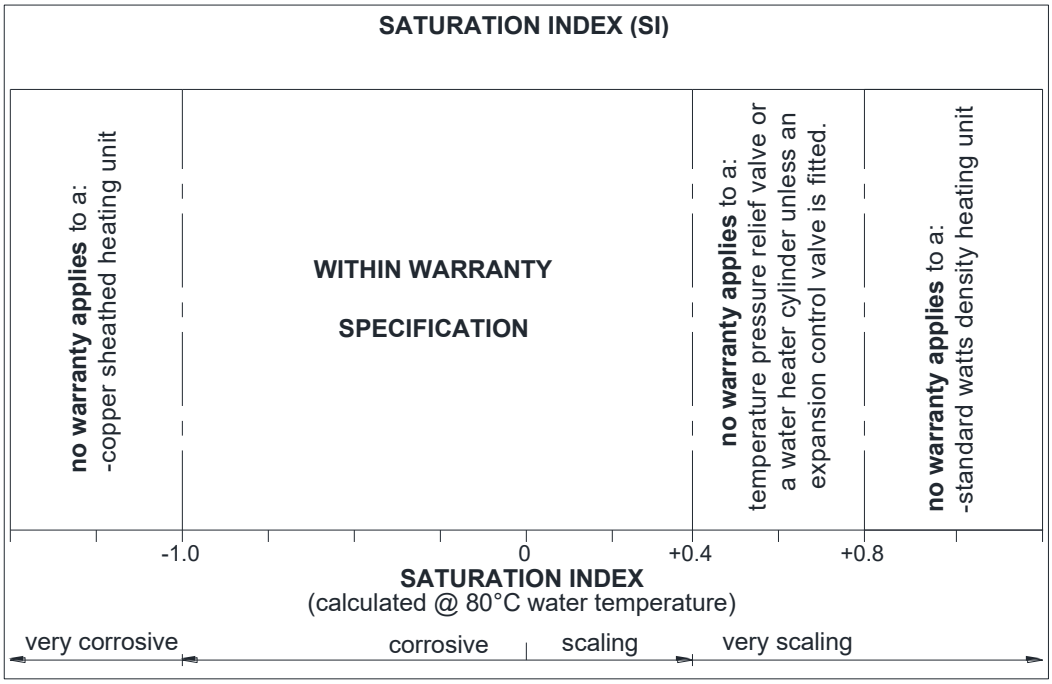

SUMMARY OF WATER CHEMISTRY ADVICE AFFECTING WARRANTY

The water heater is not suitable for certain water chemistries. Those chemistries are listed below. If the water heater is connected at any time to a water supply with the following water chemistry, the Rheem warranty will not cover any resultant faults:

Water Chemistry	Component
Total Dissolved Solids (TDS) > 2500 mg/L	water heater cylinder
Total Dissolved Solids (TDS) not suitable for anode type	water heater cylinder
Saturation Index (SI) < -1.0	copper sheathed heating unit
Saturation Index (SI) > +0.4 (if expansion control valve is not fitted)	water heater cylinder temperature pressure relief valve
Saturation Index (SI) > +0.8	standard watts density heating unit

SAVE A SERVICE CALL

Check the items below before making a service call. You will be charged for attending to any condition or fault that is not related to manufacture or failure of a part.

NOT ENOUGH HOT WATER (OR NO HOT WATER)

- **Is the electricity switched on?**
  Inspect the isolating switch marked “HOT WATER” or “WATER HEATER” at the switchboard and the isolating switch at the water heater and ensure they are turned on.

  Check the fuse or circuit breaker marked “HOT WATER” or “WATER HEATER” at the switchboard.

- **Has the Timer been set?**
  If the Timer function has been set, ensure sufficient time has been allowed to reheat the storage tank.

- **Are you using more hot water than you think?**
  Is one outlet (especially the shower) using more hot water than you think?

  Very often it is not realised the amount of hot water used, particularly when showering. Carefully review the family’s hot water usage. As you have installed an energy saving appliance, energy saving should also be practised in the home.

  Adjust your water usage pattern to take advantage of maximum energy gains. Have your plumber install a flow control valve to each shower outlet to reduce water usage.

- **Heat pump fault**
  Has the heat pump developed a fault and a fault code is displayed on the Display Panel?

  If the heat pump will not operate, turn on the Manual Electric Heating Mode. In this mode, the electric heating unit will operate if heating of the water is required. The boost capacity by the electric heating unit is 195 litres.

  Phone Rheem Service or their nearest Accredited Service Agent / Centre to arrange for an inspection

  Refer to “Manual Electric Heating Mode” on page 28.

  Also refer to “Heat Pump Is Not Operating” on page 36.

- **Relief valve running**
  Is the relief valve discharging too much water?

  Refer to “Temperature Pressure Relief Valve or Expansion Control Valve Running” on page 36.

WATER NOT HOT ENOUGH

You may find that due to heavy hot water usage the water temperature may be lower than normally expected, due to insufficient heating time being allowed. You will need to carefully plan your use of the hot water on such occasions.

HEAT PUMP IS NOT OPERATING

- **Power must be available at the water heater and the water heater switched on.**
  If there is power to the water heater, check the heat pump has been turned "On" at the Display Panel. Refer to "Turn the Water Heater On or Off" on page 18.

- **Time controlled power supply**
  If the water heater is connected to a time controlled power supply, then during periods of no power supply at the water heater, the heat pump and electric heating unit will not operate.

  This is not a fault condition, but a result of no power being available to operate the water heater.

  Check the hours of supply from the electricity retailer.

  The Display Panel will illuminate again when power is available again at the water heater.

  Note: If power was cut to the heat pump whilst it was operating, it may wait for up to three (3) minutes before recommencing to operate when power is restored and if heating is required.

- **Heat pump operating range**
  The heat pump's operating range is when the ambient air temperature is from -5°C to 43°C.

  If the ambient air temperature is between -5°C and 7°C and heating is required, the heat pump will operate for up to 3 hours 20 minutes. If heating of the water is not complete in this time, heating will switch from the heat pump to the electric heating unit.

  The water temperature in the upper part of the water heater at the end of a heating cycle will be 60°C.

- **Possible fault condition**
  If the heat pump has developed a fault, the heat pump will not operate, and a fault code will be displayed on the Display Panel in the Main Display Area. Try turning on the Manual Electric Heating Mode. In this mode, the electric heating unit will operate if heating of the water is required. The boost capacity by the electric heating unit is 195 litres. Refer to "Fault Codes" on page 27 and "Manual Electric Heating Mode" on page 28.

  Take note of the fault code and phone Rheem Service or their nearest Accredited Service Agent / Centre to arrange for an inspection.

TEMPERATURE PRESSURE RELIEF VALVE OR EXPANSION CONTROL VALVE RUNNING

- **Normal Operation**
  It is normal and desirable the temperature pressure relief valve or expansion control valve (if fitted) allows a quantity of water to escape during the heating cycle. This quantity should be equal to approximately 1/50 of the hot water used, as water expands by this volume when heated. However, if it discharges more than a bucket full of water in 24 hours, there may be another problem.

  The expansion control valve (if fitted) will discharge water instead of the temperature pressure relief valve as it has a lower pressure rating. A benefit is that energy is conserved as the discharged water is cooler. This valve is installed in the cold water line to the water heater (refer to the cold water connection diagram on page 46).

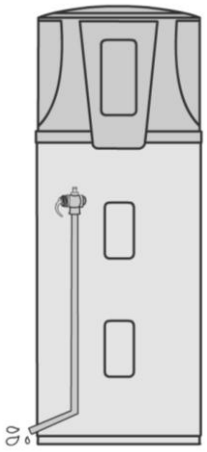

- **Continuous dribble**
  Try gently raising the easing lever on the relief valve for a few seconds (refer to "Relief Valves" on page 8). This may dislodge a small particle of foreign matter and clear the fault. Release the lever gently.

- **Steady flows for long periods (often at night)**
  This may indicate the mains water pressure sometimes rises above the designed pressure of the water heater. Ask your installing plumber to fit a pressure limiting valve.

  ⚠ **Warning:** Never replace the relief valve with one of a higher pressure rating.

- **Heavy flows of hot water from the temperature pressure relief valve until the water heater is cold - then stops until water reheats**
  The water heater **must** be switched off at the isolating switch or switchboard. Phone Rheem Service or their nearest Accredited Service Agent / Centre to arrange for an inspection.

HIGHER THAN EXPECTED ELECTRICITY BILLS

With the installation of your new air sourced heat pump water heater, electrical energy savings can be achieved. Should you at any time, feel your electricity bill is higher than expected, we suggest you check the following points:

- Is the water heater operating for extended periods with the electric heating unit?

  Prolonged periods of use where the ambient air temperature is outside of the heat pump's operating range when heating is required will increase the amount of heating required by the electric heating unit to ensure a supply of hot water, increasing running costs.

  Refer to "Heat Pump Is Not Operating" on page 36.

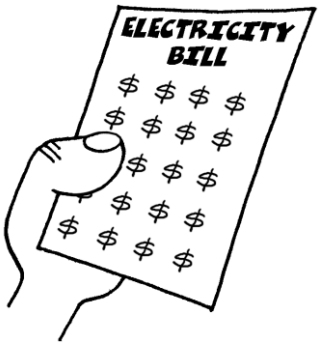

- Is the relief valve running excessively?

  Refer to "Temperature Pressure Relief Valve or Expansion Control Valve Running" on page 36.

- Is one outlet (especially the shower) using more hot water than you think?

  Refer to "Not Enough Hot Water" on page 35.

- Is there a leaking hot water pipe, dripping hot water tap, etc?

  Even a small leak will waste a surprising quantity of hot water and energy.
  Replace faulty tap washers, and have your plumber rectify any leaking pipe work.

- Has there been an increase in hot water usage?

  An increase in hot water usage will result in an increase in heat pump operation.

- Has your water heating tariff rate been increased by your electricity retailer since your previous bill?

- Is the heat pump water heater on the same tariff as the water heater replaced?

  The impact on an electricity account will depend upon the tariff arrangement of the water heater replaced and where you live. Contact your energy provider for more information on tariff arrangements and cost comparisons.

IF YOU HAVE CHECKED ALL THE FOREGOING AND STILL BELIEVE YOU NEED ASSISTANCE, PHONE RHEEM SERVICE OR THEIR NEAREST ACCREDITED SERVICE AGENT / CENTRE.

INSTALLATION

THIS WATER HEATER IS FOR OUTDOOR INSTALLATION ONLY.
THIS WATER HEATER IS NOT SUITABLE FOR POOL HEATING.

INSTALLATION STANDARDS

The water heater must be installed:

- by a qualified person, and
- in accordance with the installation instructions, and
- in Australia in compliance with the Plumbing Code of Australia (PCA) and Plumbing Standard AS/NZS 3500.4, and in New Zealand also conforming to Clauses G12 and H1 of the New Zealand Building Code, and
- in compliance with the Australian / New Zealand Wiring Rules AS/NZS 3000, and
- in compliance with all local codes and regulatory authority requirements.

⚠ **Warning:** This water heater may deliver water at high temperature. Refer to the Plumbing Code of Australia or the New Zealand Building Code, local requirements and these installation instructions to determine if additional delivery temperature control is required. Refer to "Hot Water Delivery" on page 41.

Victorian Installers

Notice to Victorian Installers from the Victorian Building Authority if this solar water heater is installed in a new Class 1 dwelling in the State of Victoria. The system model number is to be recorded on the Certificate of Compliance.

It is also a requirement to provide the householder with permanent documentation recording the system model number exactly as it is shown in the 'VEET Product Register' published by the Essential Services Commission in Victoria. See www.veu-registry.vic.gov.au/Public/ProductRegistrySearch.aspx. This documentation may be in the form of an indelible label adhered to the heat pump storage tank, or other suitable form placed in an accessible location, such as the meter box, for later inspection.

WATER HEATER APPLICATION

This water heater is designed for use in a single-family domestic dwelling for the purpose of heating potable water. Its use in an application other than this may shorten its life.

If this water heater is to be used where an uninterrupted hot water supply is necessary for the application or business, then there should be back-up redundancy within the hot water system design. This should ensure the continuity of hot water supply in the event that this water heater was to become inoperable for any reason. We recommend you provide advice to the system owner about their needs and building back-up redundancy into the hot water supply system.

The 571D270 model water heater is recommended for connection to an uninterrupted 24 hour continuous tariff power supply. Depending upon the size of the household and its hot water requirements and if the Electricity Retailer permits, an extended off-peak (overnight and day) or Extended time-controlled power supply connection of a minimum 16 hours per day may also be suitable.

A Rheem heat pump water heater consumes less energy than an electric water heater. The impact on an electricity account will depend on the tariff arrangement of the water heater replaced and the installation location. Contact the energy provider for more information on tariff arrangements and cost comparisons.

TRANSPORTING AND HANDLING THE WATER HEATER

Take care when handling the water heater. The jacket surrounding the heat pump at the top of the water heater needs to be handled gently so as not to cause damage.

Do not tilt the water heater more than 30° from the vertical. Care must be taken during transportation and handling as the water heater is top heavy. It will become unstable if tilted more than 30° from the vertical. The water heater must be secured during transport to avoid tipping over. To prevent injury or damage, the water heater must also be placed on a level surface.

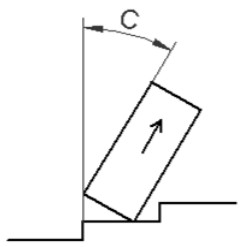

(C ≤ 30°)

In addition, tilting the water heater more than 30° from the vertical during handling will unsettle the refrigerant gas and compressor lubricating oil. If the water heater has been tilted, it will need one hour to settle before the power to the water heater can be switched on, otherwise damage to the compressor may result.

All packaging materials must be removed from the water heater prior to its installation. This includes the removal of the packaging base of the carton from the underside of the water heater.

WATER HEATER LOCATION

The water heater is suitable for outdoor installation only. The water heater should be installed close to the most frequently used outlet and its position chosen with noise, safety and service in mind. Make sure people (particularly children) will not accidentally touch the air inlet and outlet louvres and that they are clear of obstructions and shrubbery.

It is advisable to install the water heater away from bedroom or living room windows as the system controls can generate a level of noise whilst they are operating. Consider the location in relation to neighbours' bedrooms and living room windows.

Clearance must be allowed for servicing of the water heater. The water heater must be accessible without the use of a ladder or scaffold. Make sure the temperature pressure relief valve lever is accessible and the top and front cover, air inlet and outlet louvres, system controls and thermostat can be removed for service.

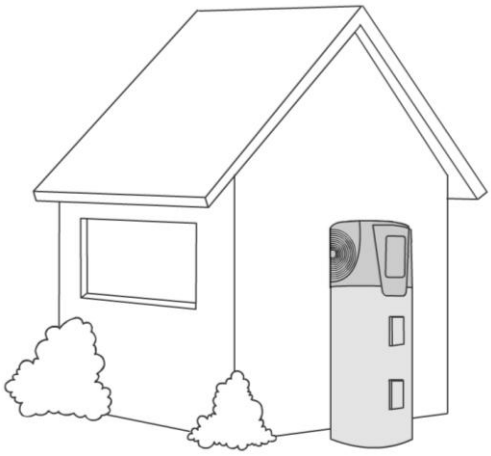

To maintain the designed performance, air flow and air discharge from the heat pump of a single water heater installation, the minimum clearance distances to a wall or obstruction from the water heater are:

- 25 mm from a wall behind the water heater, and
- 350 mm on the left hand side from the air inlet louvre, and
- 600 mm on the right hand side from the air outlet louvre.

For Service access of a single water heater installation, it is also recommended and preferred to leave a minimum clearance distance, where this is possible, of:

- 600 mm to the left and right hand sides of the water heater, and
- 600 mm in front of the water heater, and
- 650 mm above the top of the water heater for jacket top and anode inspection or removal.

Refer to the dimensions diagram on page 43.

You must be able to read the information on the rating plate. Remember you may have to remove the entire water heater later for servicing.

The heat pump water heater is to be installed at ground or floor level and must stand vertically upright on a stable base as acceptable to local authorities. The base of the water heater is made of corrosion resistant material, and it may be placed directly in contact with the supporting surface. It is not necessary to allow for free air circulation under the base of the water heater.

Note: The water heater should not be placed in direct contact with a concrete surface that is less than two months old and not fully cured as this may attack the metal coating of the water heater base. A moisture barrier should be used between the two surfaces in this instance. The barrier should extend at least 100 mm from the water heater and may be trimmed after two months.

The water heater must not be installed in an area with a corrosive atmosphere where chemicals are stored or where aerosol propellants are released, as exposure to the corrosive atmosphere may attack the materials used in the water heater and heat pump system.

MAINS WATER SUPPLY

Where the mains water supply pressure exceeds that shown in the table below, an approved pressure limiting valve is required and should be fitted as shown in the cold water connection diagram on page 46.

Model	270
Temperature pressure relief valve setting	1000 kPa
Expansion control valve setting *	850 kPa
Maximum mains supply pressure	
With expansion control valve	680 kPa
Without expansion control valve	800 kPa

* Expansion control valve not supplied with the water heater.

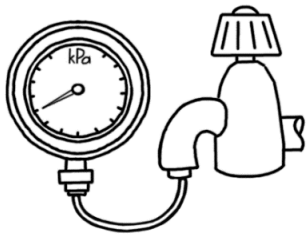

TANK WATER SUPPLY

If the water heater is supplied with water from a tank supply and a pressure pump system is not installed, then the bottom of the supply tank must be at least 1 m above the highest point of the hot water plumbing system, including the water heater. Care must be taken to avoid air locks. The cold water line to the water heater should be adequately sized and fitted with a full flow gate valve or ball valve.

REDUCING HEAT LOSSES

The cold water line to and the hot water line from the water heater must be insulated in accordance with the requirements of AS/NZS 3500.4 and Clause 12 of the New Zealand Building Code. The insulation must be weatherproof and UV resistant if exposed.

SADDLING - PIPE WORK

To prevent damage to the cylinder when attaching pipe clips or saddles to the water heater jacket, we recommend the use of self-drilling screws with a maximum length of 13 mm. Should pre-drilling be required, extreme caution must be observed when penetrating the jacket of the water heater.

Note: If the cylinder is damaged as a result of attaching pipe clips or saddles to the jacket, any resultant faults will not be covered by the Rheem warranty.

SEISMIC RESTRAINT

New Zealand Building Code Clause B1 requires building elements (including storage water heaters) to be adequately supported including support against earthquake forces. This water heater must be restrained to protect against seismic forces. Clause G12 (Edition 3 Amendment 13) Paragraph 6.11.4 and Figure 14 outline an acceptable solution to this requirement.

As the water heater has a minimum clearance of 25 mm to a wall behind the water heater, suitably sized vertical blocking will be required running the full height of the storage section only of the water heater, to comply with this requirement. Ensure the vertical blocking does not encroach over the air inlet and outlet louvres of the heat pump. The blocking shall be installed in a manner as to allow the condensate drain of the heat pump to run to a visible discharge point.

Three (3) Seismic Strap constraints are to be installed around the 571D270 model water heater and suitably fixed to the wall behind the water heater. Provide sufficient tension on the straps to secure the water heater, taking care not to cause damage to the water heater and outer casing.

The location of the Seismic Straps shall be:

- Top strap: the top Seismic Strap is to be located below the Display Panel housing and a maximum of 100 mm from the connection of the heat pump unit to the storage tank of the water heater and in a position so as not to cover the rating label of the water heater. The Strap is not to foul on the Display Panel housing.
- Bottom strap: the bottom Seismic Strap is to be located below the cold water inlet of the water heater. If there is insufficient space below to inlet to fit the width of the Strap, then it can be installed above the inlet. The Strap is not to foul on the pipe seal.
- Middle strap: the middle Seismic Strap is to be located approximately at the midpoint between the top and bottom Seismic Straps.

Refer to “Typical Installation – Outdoor Location” on page 45.

ANODE TYPES

The vitreous enamel lined cylinder of the water heater is only covered by the Rheem warranty when the total dissolved solids (TDS) content in the water is less than 2500 mg/L and when the correct colour coded anode is used. If an incorrect colour coded anode is used in the water heater, any resultant faults will not be covered by the Rheem warranty. In addition, the use of an incorrect colour coded anode may shorten the life of the water heater cylinder.

The correct colour coded anode for the water supply being used must be selected and fitted to the water heater for the Rheem warranty to apply to the water heater cylinder (refer to "Water Supplies" on page 32 and the Anode Selection table on page 32). The black anode is typically fitted as standard.

If an incorrect anode is used, there is also the possibility the anode may become overactive and hydrogen gas could accumulate in the top of the water heater during long periods of no use. In areas where this is likely to occur, the installer should instruct the householder on how to dissipate the gas safely (refer to "Caution" on page 33).

HOT WATER DELIVERY

⚠ **Warning**: This water heater can deliver hot water at temperatures up to 60°C, sufficiently hot to cause severe scalding. Water at this temperature may be plumbed to fixtures where water hotter than 50°C is allowed, such as the kitchen and laundry.

The installing plumber may have a legal obligation to ensure the installation of this water heater meets the water temperature delivery requirements of the Plumbing Code of Australia and New Zealand Building Code Clause G12 so that heated water delivered to fixtures and appliances used primarily for personal hygiene is at a temperature which is unlikely to scald.

It is necessary and we recommend that a temperature limiting device be fitted between the water heater and the fixtures and appliances used primarily for personal hygiene such as in a bathroom, ensuite, public amenities or other ablution areas, to reduce the risk of scalding.

The temperature limiting device used with a heat pump water heater should have a specified 'minimum temperature differential' between the hot water inlet and the tempered water outlet of no greater than 10°C. Refer to the manufacturer's specifications of the temperature limiting device.

If a pressure limiting valve is installed on the cold water line to the water heater and the cold water line to a temperature limiting device branches off before this valve or from another cold water line in the premises, then a pressure limiting valve of an equal pressure setting may be required prior to the temperature limiting device.

Where a temperature limiting device is installed adjacent to the water heater, the cold water line to the temperature limiting device can be branched off the cold water line either before or after the isolation valve, pressure limiting valve and non-return valve to the water heater. If an expansion control valve is required, it must always be installed after the non-return valve and be the last valve prior to the water heater.

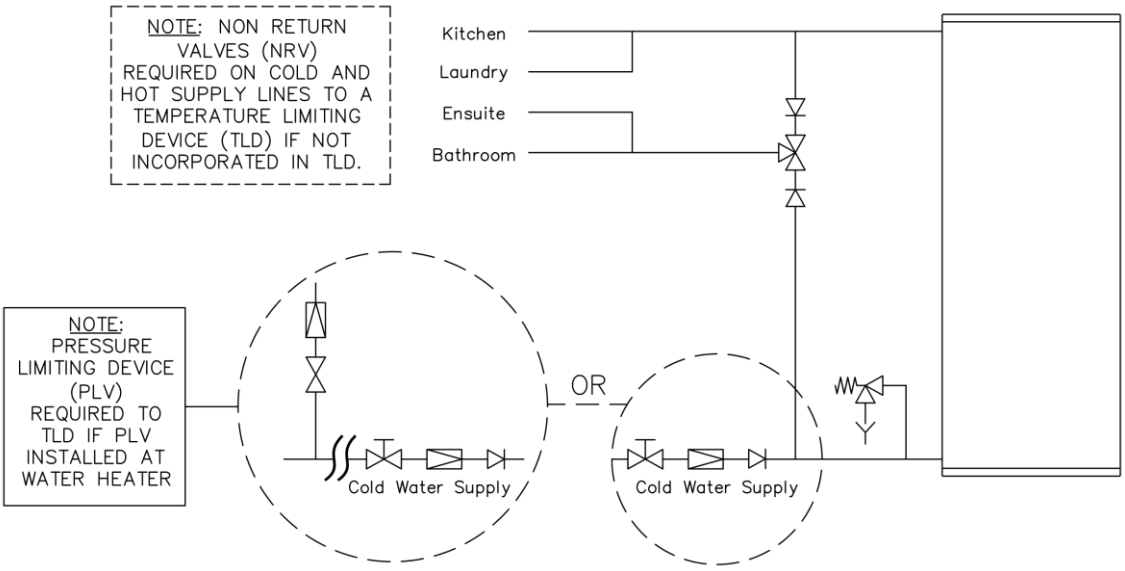

Two Temperature Zones Using a Temperature Limiting Device

CIRCULATED HOT WATER FLOW AND RETURN SYSTEM

A 571D270 model heat pump water heater should not be installed as part of a circulated hot water flow and return system in a building.

If a circulated flow and return system is required, it is necessary to install a secondary water heater supplied from the heat pump water heater. The flow and return lines connect to the secondary water heater, not the heat pump storage tank. The secondary water heater makes up for the pipe heat loss in the flow and return system and must be able to provide a hot water outlet temperature of at least 60°C.

Note: The thermostat or preset outlet temperature of the secondary water heater must always be set to maintain a temperature of at least 60°C in the hot water flow and return line, including making up pipe heat losses in the system.

Refer to the diagram Circulated Hot Water Flow and Return System – Heat Pump Water Heater on page 42.

Temperature Limiting Device

A temperature limiting device cannot be installed in circulated hot water flow and return pipe work. The tempered water from a temperature limiting device cannot be circulated. Where a circulated hot water flow and return system is required in a building, a temperature limiting device can only be installed on a dead leg, branching off the circulated hot water flow and return pipe.

If circulated tempered water were to be returned back to the water heater, depending on the location of the return line connection on the water supply line to the water heater, then either:

- water will be supplied to the cold water inlet of the temperature limiting device at a temperature exceeding the maximum recommended water supply temperature, or
- when the hot taps are closed no water will be supplied to the cold water inlet of the temperature limiting device whilst hot water will continue to be supplied to the hot water inlet of the temperature limiting device.

These conditions may result in either water at a temperature exceeding the requirements of AS/NZS 3500.4 being delivered to the hot water outlets in the ablution areas, or the device closing completely and not delivering water at all, or the device failing. Under either condition, the operation and performance of the device cannot be guaranteed.

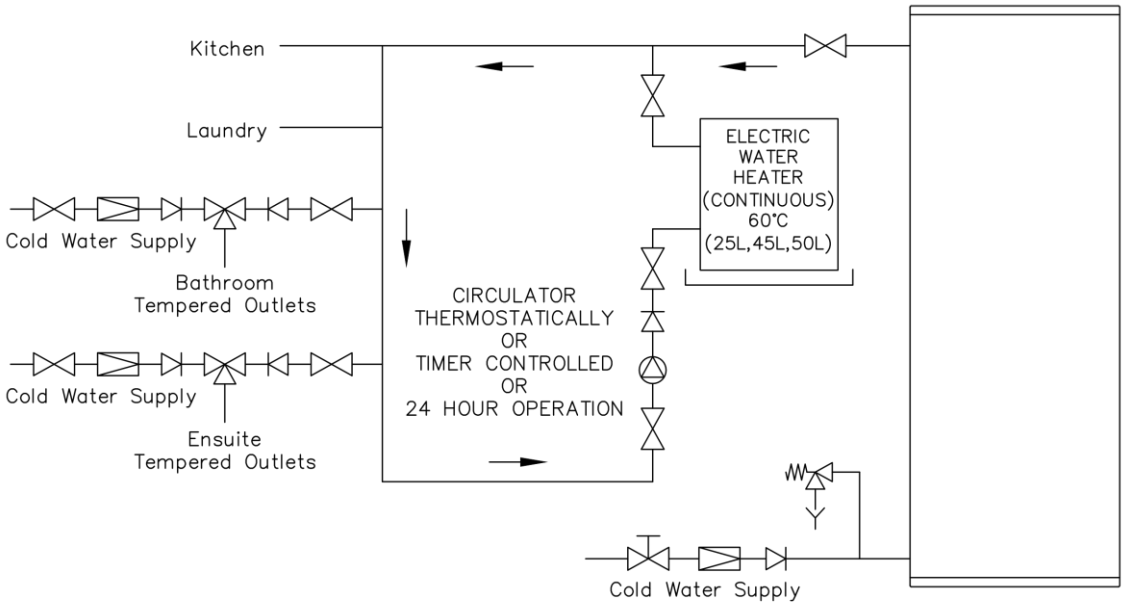

NOTE: A PLV IS REQUIRED TO BE INSTALLED ON THE COLD SUPPLY LINE TO THE TEMPERING VALVE IF A PLV IS INSTALLED ON THE COLD SUPPLY LINE TO THE WATER HEATER.

Circulated Hot Water Flow and Return System – Heat Pump Water Heater

DIMENSIONS AND TECHNICAL DATA
Dimensions

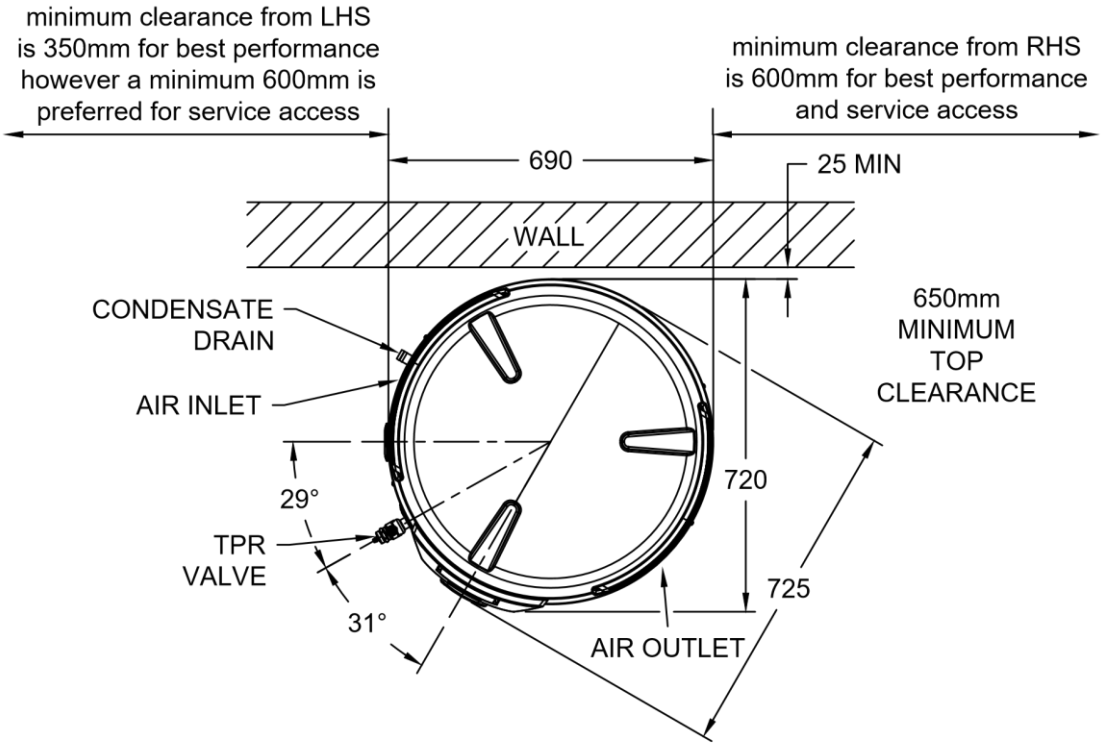

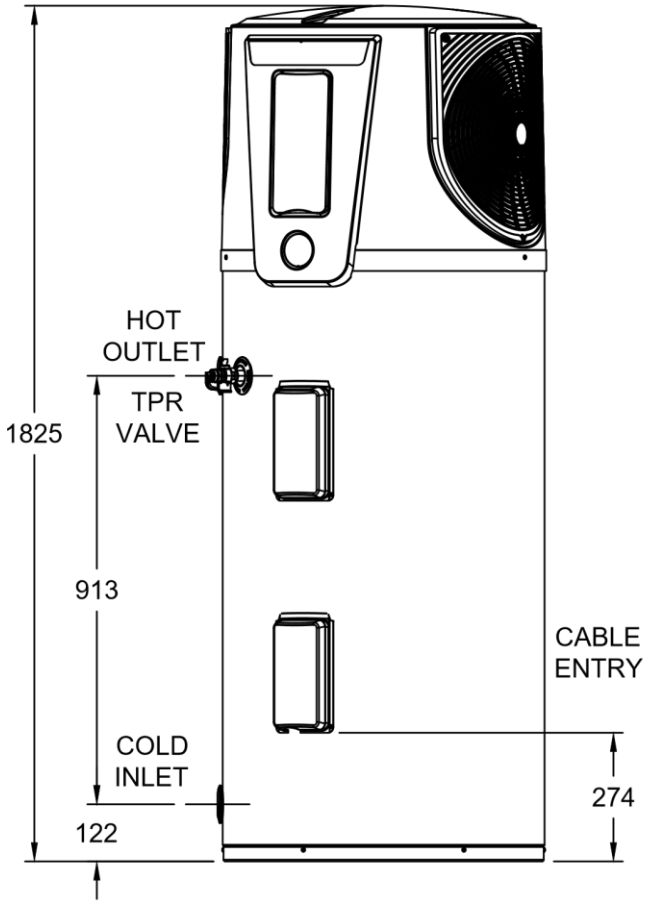

Model 571D270
There is a minimum clearance of 25 mm from a wall behind the water heater

Technical Data

Model number		**571D270**
Product number – with black anode (magnesium)		571D270R5
Product number – with blue anode (aluminium)		571D270R5/B
Storage capacity	litres	270
Boost capacity	litres	195
Weight system cartoned	kg	145
Weight system full	kg	405
Rated heat pump power input @ 240 V	watts	985
Electric element rating @ 240 V	watts	2400
Maximum power input @ 240 V	watts	3600
Electrical circuit	Amps	15
Noise Level (LA90) @ 1 metre	dB(A)	48

Refrigerant type	R513a
Refrigerant circuit pressure	2600 kPa
Refrigerant charge	990 grams
IP Rating	IP24
Average COP @ 19°C Ambient air temp & 8°C to 60°C water temp	4.4
Avg HP Heating Capacity @ 19°C Ambient air temp & 8°C to 60°C water temp	4.0 kW

Technical data is subject to change

Heat Pump 571D270 Performance Specifications

Ambient Air Temperature	Relative Humidity	Average Heat Pump Heating Capacity (kW)	Recovery Rate @ 45°C rise (L / hr)	Average Coefficient of Performance (COP)
7°C	81%	3.3	62	3.9
19°C	62%	4.0	77	4.4
34°C	36%	5.1	98	5.1
35°C	52%	5.3	101	5.3

Back-Up Heating Unit Recovery Rate @ 240 V

Heating Unit Rating	Recovery Rate @ 30°C rise (L / hr)	Recovery Rate @ 40°C rise (L / hr)	Recovery Rate @ 50°C rise (L / hr)
2400 watts	69	52	41

Noise Level - A noise test was conducted at 1 m from the water heater. The noise level when installed may be higher due to sound reflections from adjacent walls and structures.

COP – The Coefficient of Performance for a heat pump is the ratio of how much useful heat it produces for water heating to the power input into the water heater. The higher the COP number, the more efficient the heat pump is. The actual COP of the product at any given time will be impacted by a number of factors, including the ambient air and cold-water inlet temperatures at the place of installation and time of day / season of operation.

An average Coefficient of Performance (COP) value of 4.4 was measured under test conditions with an ambient air temperature of 19˚C/15˚C (Dry Bulb/Wet Bulb), heating of the water from 8˚C to 60˚C during water heater operation and a power supply of 240 V~ 50 Hz. The Heat Pump average heating capacity in Watts (and converted to kilowatts – kW) and its water heating capacity in Litres / hour were calculated from the results of this test.

Ambient Air Temperature & Humidity – The performance of a Heat Pump changes with ambient air temperature, humidity and incoming water temperature. The warmer the air temperature and the higher the Relative Humidity and the cooler the water temperature, then the higher is the heating rate of the heat pump. Performance specifications stated in relation to the heat pump are measured at predefined conditions during its testing.

Average Heating Capacity kW – This is how much heating power is put into the water during the heating cycle by the heat pump. It is expressed as an average due to the changes in heating power from the refrigeration cycle as the water is being heated and its temperature increases during the heating cycle.

Recovery Rate @ 45°C rise L/hr – Is the number of litres of water that can be heated through a 45°C temperature rise in one hour, e.g., when the air temperature is 19°C, the heat pump can heat 77 litres of water from 15°C to 60°C in one hour.

FREEZE PROTECTION

The water heater has a freeze protection function built in. When the water heater is placed into Vacation Mode at the Display Panel and power supply is available to the water heater, either the heat pump operates or the electric heating unit is used to maintain a minimum tank water temperature above 10°C.

The water heater has NO WARRANTY for freeze damage if power is unavailable at the water heater.

⚠ **Warning:** In areas where the ambient air temperature may fall below 4°C, power must be available to the water heater at all times.

TYPICAL INSTALLATION – OUTDOOR LOCATION

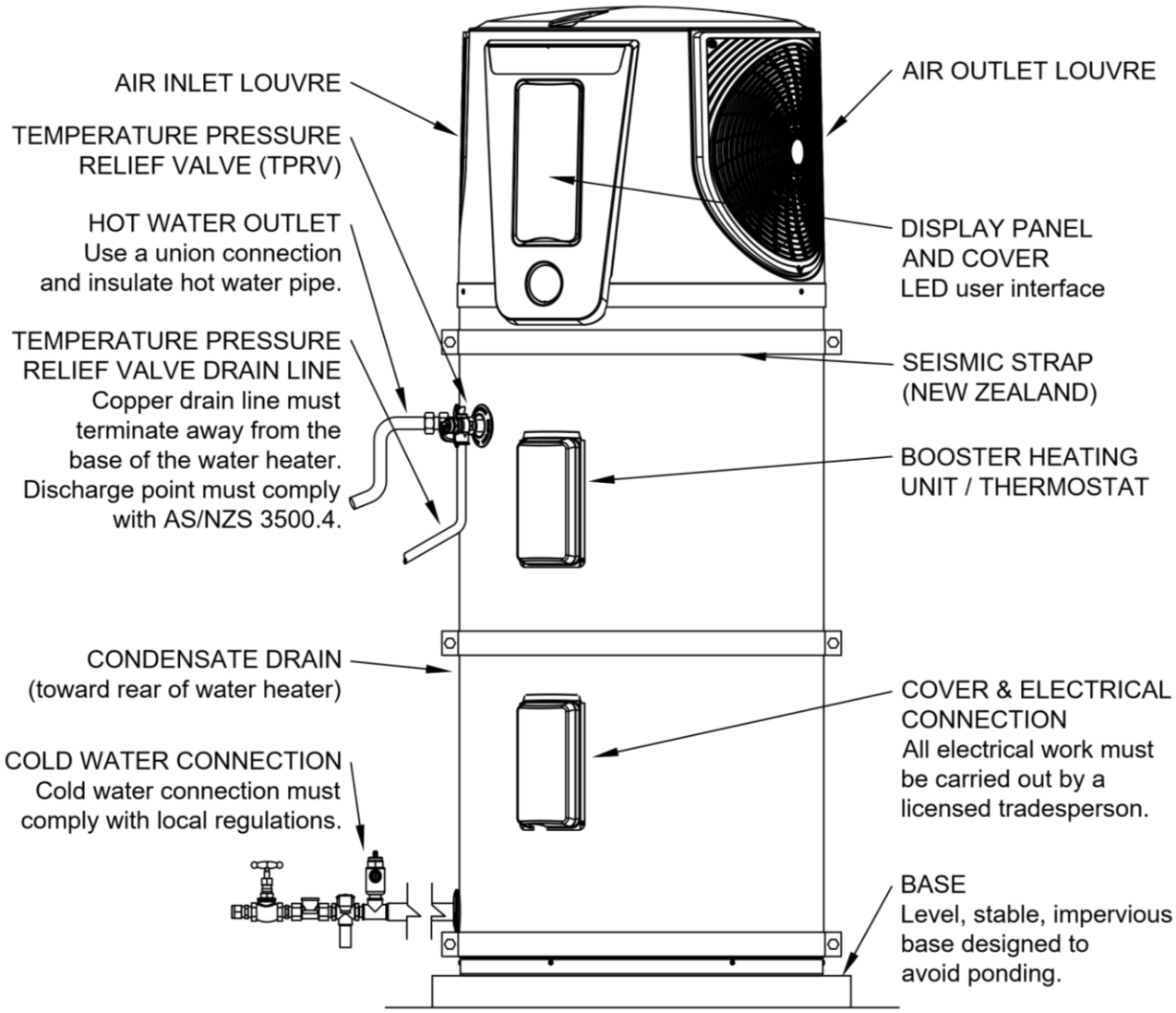

Note: In New Zealand, the 571D270 model requires three (3) Seismic Straps to be installed. Refer to "Seismic Restraint" on page 40 for additional information and Seismic Strap positioning.

CONNECTIONS – PLUMBING

All plumbing work must be carried out by a qualified person and in accordance with the Standard AS/NZS 3500.4 and all local codes and regulatory authority requirements. In New Zealand, the installation must also conform to Clauses G12 and H1 of the New Zealand Building Code.

CONNECTION SIZES

- Hot water connection: Rp 3/4
- Cold water connection: Rp 3/4
- Relief valve connection: Rp 1/2

WATER INLET AND OUTLET

The pipe work must be cleared of foreign matter before connection and purged before attempting to operate the water heater. All olive compression fittings must use brass or copper olives. Use an approved thread sealant such as Teflon tape on all threaded joints.

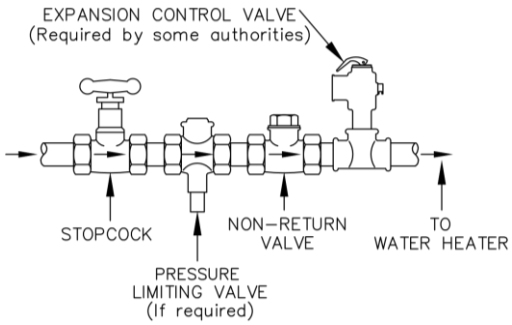

An isolation valve and non-return valve must be installed on the cold water line to the water heater. An acceptable arrangement is shown in the diagram. Refer also to "Hot Water Delivery" on page 41 and to "Mains Water Supply" on page 40.

A disconnection union must always be provided at the cold water inlet and hot water outlet on the water heater to allow for disconnection of the water heater.

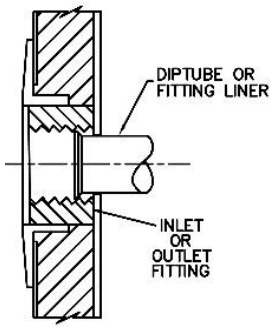

This water heater has either a plastic dip tube or fitting liner in the inlet and outlet fittings (see diagram). These must be in place for the water heater to function properly. Do not remove or damage them by using heat nearby. They will be pushed into the correct position as the fitting is screwed in.

This water heater is intended to be permanently connected to the water mains and not connected by a hose-set. A braided flexible hose or semi-flexible connector may be used for connection to the water heater, where permitted by AS/NZS 3500.4.

PIPE SIZES

To achieve true mains pressure operation, the cold water line to the water heater should be the same size or bigger than the hot water line from the water heater.

The pipe sizing for hot water supply systems should be carried out by persons competent to do so, choosing the most suitable pipe size for each individual application. Reference to the technical specifications of the water heater and local regulatory authority requirements must be made.

CONDENSATE DRAIN

A condensate drain line is supplied fitted to the water heater. Check the fitting of this drain line is secure upon the installation of the water heater.

TEMPERATURE PRESSURE RELIEF VALVE

The temperature pressure relief valve is shipped in a plastic bag attached to the side of water heater. The temperature pressure relief valve must be fitted before the water heater is operated. Before fitting the relief valve, make sure the probe has not been bent.

To fit the relief valve:

- Seal the thread with an approved thread sealant such as Teflon tape - never hemp. Make sure tape does not hang over the end of the thread.
- Hand tighten the valve into the opening marked “Relief Valve” (refer to the installation diagram on page 45).
- Using a spanner engaged on the valve’s spanner flats and applying medium pressure to tighten, turn the relief valve an additional ½ to 1 ½ turns to secure and make the joint water tight, leaving the valve drain pointing downwards.

  ⚠ **Warning:** Do not use a pipe wrench or poor fitting tool on the valve body nor over tighten the valve, as this could damage the valve and prevent safe operation.
- Operate the easing lever on the valve to check the smooth operation of the valve plunger. It is very important the lever is raised and lowered gently. The lever should move smoothly and without undue force.
- If the lever cannot be moved or is jerky in its movement, then the valve has been damaged and must be replaced.
- A copper drain line must be fitted to the temperature pressure relief valve (refer to "Relief Valve Drain" on page 48).
- The valve must be insulated with closed cell polymer insulation or similar (minimum thickness 9 mm) and the insulation installed so as not to impede the operation of the valve.

  The insulation must be weatherproof and UV resistant if exposed.

  The flexible insulation collar supplied with the temperature pressure relief valve meets these requirements and must be placed over the body of the valve (refer to the diagram on page 47).

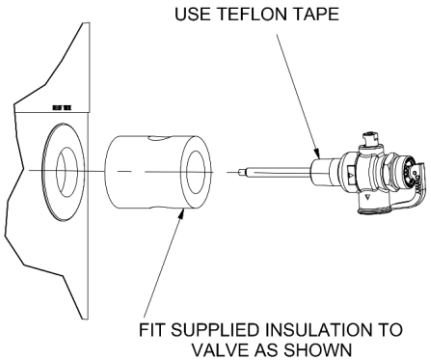

flexible insulation collar

EXPANSION CONTROL VALVE

In South Australia, Western Australia, New Zealand and under some other local regulations, it is mandatory to install an expansion control valve (ECV) in the cold water line to the water heater. In other areas, an ECV is required if the saturation index is greater than +0.4 (refer to “Water Supplies” on page 32).

The expansion control valve must always be installed after the non-return valve and be the last valve installed prior to the water heater (refer to diagram on page 46). A copper drain line must be fitted to the expansion control valve (refer to "Relief Valve Drain" on page 48).

The valve, if installed within 500 mm of the water heater, must be insulated with closed cell polymer insulation or similar (minimum thickness 9 mm) and the insulation installed so as not to impede the operation of the valve. The insulation must be weatherproof and UV resistant if exposed.

RELIEF VALVE DRAIN

DN15 copper drain lines must be fitted to the temperature pressure relief valve and expansion control valve (if one is installed) to carry the discharge clear of the water heater. Connect the drain lines to the valves using disconnection unions. The drain line from the valve to the point of discharge should be as short as possible, have a continuous fall all the way from the water heater to the discharge outlet and have no tap, valves or other restrictions in the pipe work.

A drain line from a relief valve must comply with the requirements of AS/NZS 3500.4 and Clause G12 of the New Zealand Building Code.

A drain line must be no longer than 9 metres with no more than three bends greater than 45° before discharging at an outlet or air break. The maximum length of 9 metres for a drain line is reduced by 1 metre for each additional bend required of greater than 45°, up to a maximum of three additional bends. Where the distance to the point of final discharge exceeds this length, the drain line can discharge into a tundish.

Subject to local regulatory authority approval, the drain lines from the temperature pressure relief valve and expansion control valve from an individual water heater may be interconnected.

The outlet of a drain line must be in such a position that flow out of the pipe can be easily seen, but arranged so discharge will not cause injury, damage or nuisance. The termination point of a drain line must comply with the requirements of AS/NZS 3500.4. Drain lines must not discharge into a safe tray.

In locations where water pipes are prone to freezing, drain lines must be insulated, must not exceed 300 mm in length and are to discharge into a tundish through an air gap of between 75 mm and 150 mm.

If a drain line discharges into a tundish, the drain line from the tundish must be not less than DN20. The drain line from a tundish must meet the same requirements as for a drain line from a relief valve.

⚠ **Warning:** As the function of the temperature pressure relief valve on this water heater is to discharge high temperature water under certain conditions, it is strongly recommended the pipe work downstream of the relief valve be capable of carrying water exceeding 93°C. Failure to observe this precaution may result in damage to pipe work and property.

CONNECTIONS – ELECTRICAL

The power supply to the water heater must not be switched on until the water heater is filled with water and a satisfactory megger reading is obtained.

MEGGER READING

When a megger test is conducted on this water heater, then the following should be noted.

⚠ **Warning:** This water heater contains electronic equipment and 500 V insulation tests must only be conducted between active and earth and between neutral and earth. An active to neutral test WILL damage the electronics.

An insulation test result of greater than 1 MΩ for this water heater is normal.

ELECTRICAL CONNECTION

All electrical work and permanent wiring must be carried out by a qualified person and in accordance with the edition of the Wiring Rules AS/NZS 3000 in force in the state or territory at the time of installation, and all local codes and regulatory authority requirements.

The water heater must be directly connected to a 220 V - 240 V a.c. 50 Hz mains power supply. The power supply must be able to supply a minimum of 15 Amps.

Note: It is not recommended to connect this water heater via a power switching device which allows alternative supply of grid power and photovoltaic (PV) power.

The water heater must be on its own circuit with an isolating switch installed at the switchboard. The Wiring Rules requires a second and lockable isolating switch be installed adjacent to but not on or attached to the water heater, and a residual current device (RCD) installed in the electrical circuit to the water heater. The RCD may not be required to be installed in New Zealand.

The 571D270 model water heater is recommended for connection to an uninterrupted 24 hour continuous tariff power supply. Depending upon the size of the household and its hot water requirements and if the Electricity Retailer permits, an extended off-peak (overnight and day) or Extended time-controlled power supply connection of a minimum 16 hours per day may also be suitable.

A flexible 20 mm conduit is required for the electrical cable to the water heater. The conduit is to be connected to the unit with a 20 mm terminator at the lower front cover. Connect the power supply wires directly to the terminal block and earth tab connection, ensuring there are no excess wire loops inside the front cover. The temperature rating of the power supply wires insulation must suit this application, or the wiring protected by insulating sleeving with an appropriate temperature rating if it can make contact with the internal storage cylinder. The temperature of the internal storage cylinder can reach 60°C under normal operation.

The water heater will only operate on a sine wave at 50 Hz. Devices generating a square wave cannot be used to supply power to the water heater.

ELECTRIC HEATING UNIT AND THERMOSTAT SETTING

The water heater has an electric heating unit and thermostat and is controlled by the electronic controller. The thermostat is not adjustable. The electric heating unit will be automatically activated during periods when the ambient air temperature falls below -5°C or above 43°C and heating of the water is required. In addition, if the heat pump operates between -5°C and 7°C for longer than 3 hours 20 minutes, the electric heating unit will turn on to assist in the heating of the water.

TIMER

A Timer function on the Display Panel allows the hours of operation of the water heater to be set during one or two timed periods in a 24-hour period. Refer to “Timer” on page 21.

If the water heater is set to run during one or two timed periods, the heat pump and the electric heating unit will not operate outside of this timed period under Standard Heating operation.

Note: If there is a risk of freezing conditions, the electrical supply to the water heater should not be switched off, otherwise damage could result (refer to “Freeze Protection” on page 10).

MULTIPLE INSTALLATIONS

A multiple installation of Rheem 571D270 heat pump water heaters on a single manifold or multiple manifolds is possible, using the Equa-Flow® manifold system, where large volumes of hot water are required. The Equa-Flow principle will function with water heaters in line or in rows back to back or around an external corner. Due to air flow requirements, it is not recommended to install the water heaters around an internal corner.

The cold water and hot water manifolds must be designed to balance the flow from each water heater. To achieve this, there are basic installation requirements and principles which must be followed:

1. The maximum number of water heaters in a bank should be 8, however several banks of water heaters can be installed.
2. The hot water line from the manifold must leave from the opposite end to which the cold water line enters the manifold.
3. The water heaters must be of the same model.
4. The cold water line, cold and hot headers and hot water line must be sized to meet the requirements of both AS/NZS 3500.4 and the application. Refer also to the table on page 51 for the minimum header and branch pipe sizes.
5. A non-return valve, isolation valve and if required a pressure limiting valve and expansion control valve(s), must be installed on the cold water line to the system.
6. A full flow gate valve or ball valve (not a stop tap, as used on a single water heater installation) must be installed on both the cold water branch and hot water branch of each water heater.
7. An expansion control valve for each water heater can be installed into a brass Tee on the cold branch to the tank after the gate valve or ball valve, in lieu of installing them on the cold water line to the system.
8. Non-return valves or pressure limiting valves must not be installed on the branch lines to the water heaters.
9. All fittings, valves and branch lines must be matched sets all the way along the manifold.
10. Sufficient space must be left to enable access, servicing or removal of each water heater.
11. The temperature pressure relief valve drain line from each water heater can terminate at a common tundish (funnel) with a visible air break at each drain discharge point (refer to the diagram on page 50 and to "Relief Drain Line" on page 48).

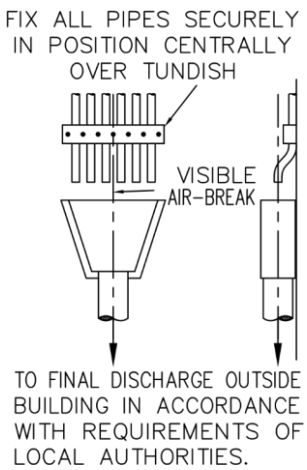

TPR Valve Drain Line
Common Discharge Point

Refer to the diagrams on pages 51 to 53 for installation, plant layout and manifold details.

In addition to the basic installation requirements and principles of manifolding, the following requirements for manifolding heat pump water heaters of this model must be followed:

12. The heat pump water heaters can be installed in the same orientation as a standard single water heater installation, with the cold and hot water connections of the water heater parallel to the wall.
13. A minimum of 900 mm is required in front of each heat pump water heater to enable access, servicing or removal of the water heater.
14. A circulated hot water flow and return system must not be returned back into the heat pump water heaters (refer to "Circulated Flow and Return System" on page 42). If a circulated hot water system is required, the flow and return line connects to either a secondary water heater to make up for the pipe heat loss in the flow and return system or to an inline booster water heater(s), not the heat pump storage tank(s) (refer to diagrams on page 52).

INSTALLATION DIMENSIONS – MULTIPLE 571D270 HEAT PUMP WATER HEATERS

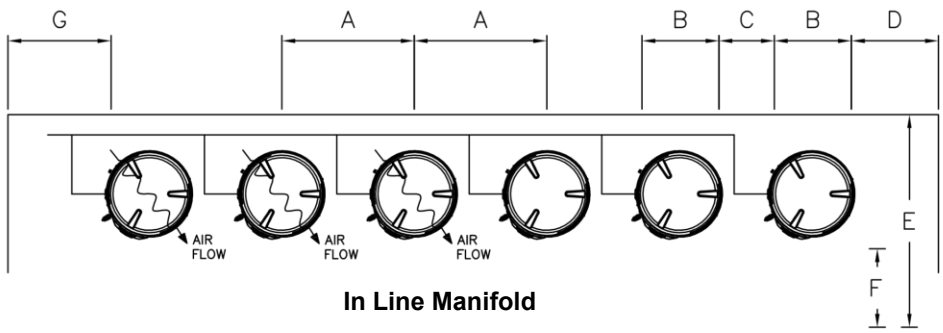

In Line Manifold

INSTALLATION LAYOUT MINIMUM DIMENSIONS HEAT PUMP 270

A	940
B	690
C	250
D	1000
E	1650
F	900
G	900

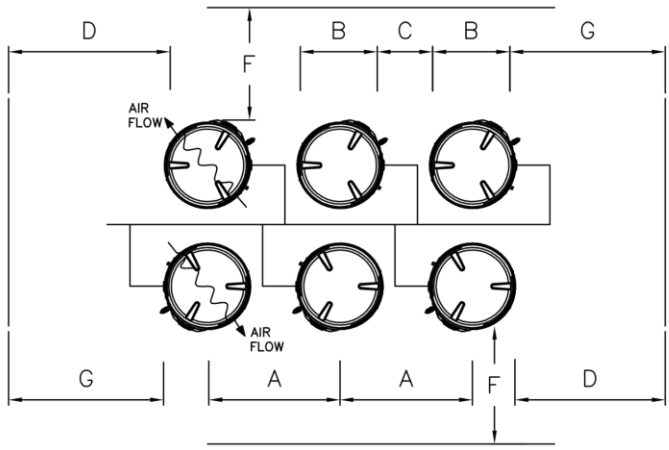

Back to Back Manifold

PIPE SIZE		
No. of Water Heaters	Header Size Cold/Hot	Branch Size Cold/Hot
1	DN20	DN20
2	DN25	DN20
3	DN32	DN20
4	DN40	DN20
5	DN50	DN20
6	DN50	DN20
7	DN50	DN20
8	DN50	DN20

This pipe sizing is designed for a maximum water velocity of 1.2 m/s for a maximum flow rate of 0.25L/s per water heater.

TYPICAL INSTALLATION – MULTIPLE 571D270 HEAT PUMP WATER HEATERS – DEAD LEG

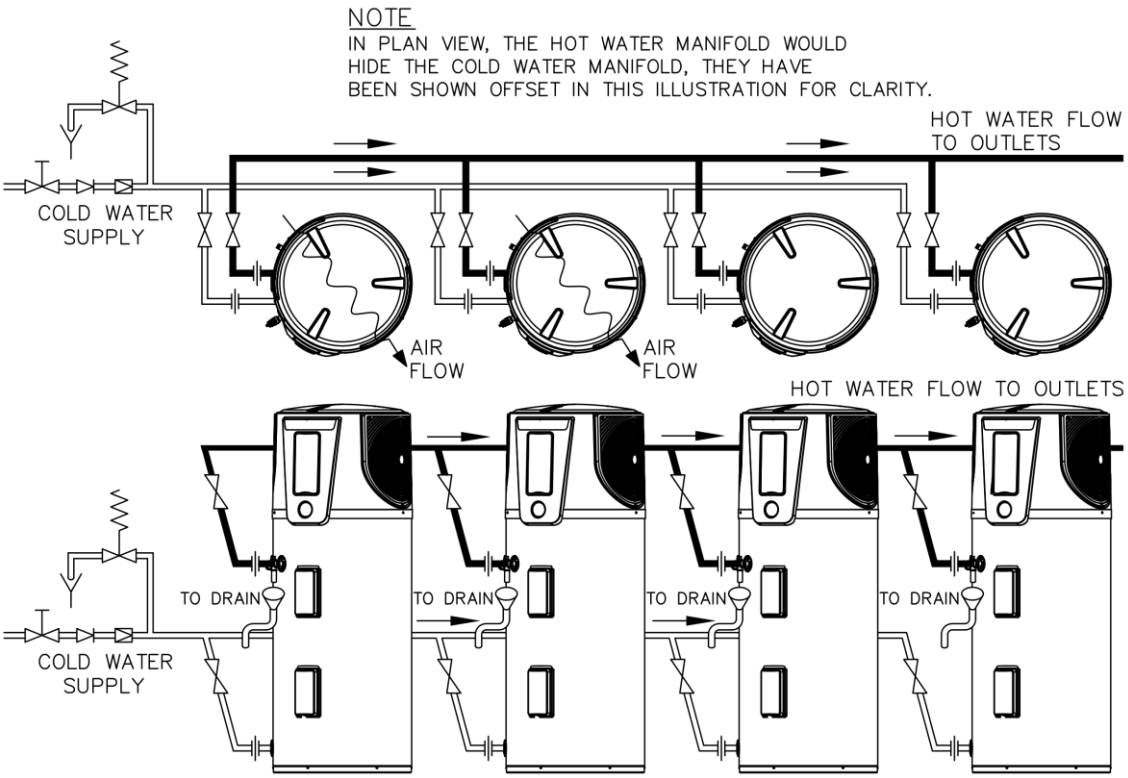

TYPICAL INSTALLATION – MULTIPLE HEAT PUMP WATER HEATERS – RECIRCULATING NO BOOST

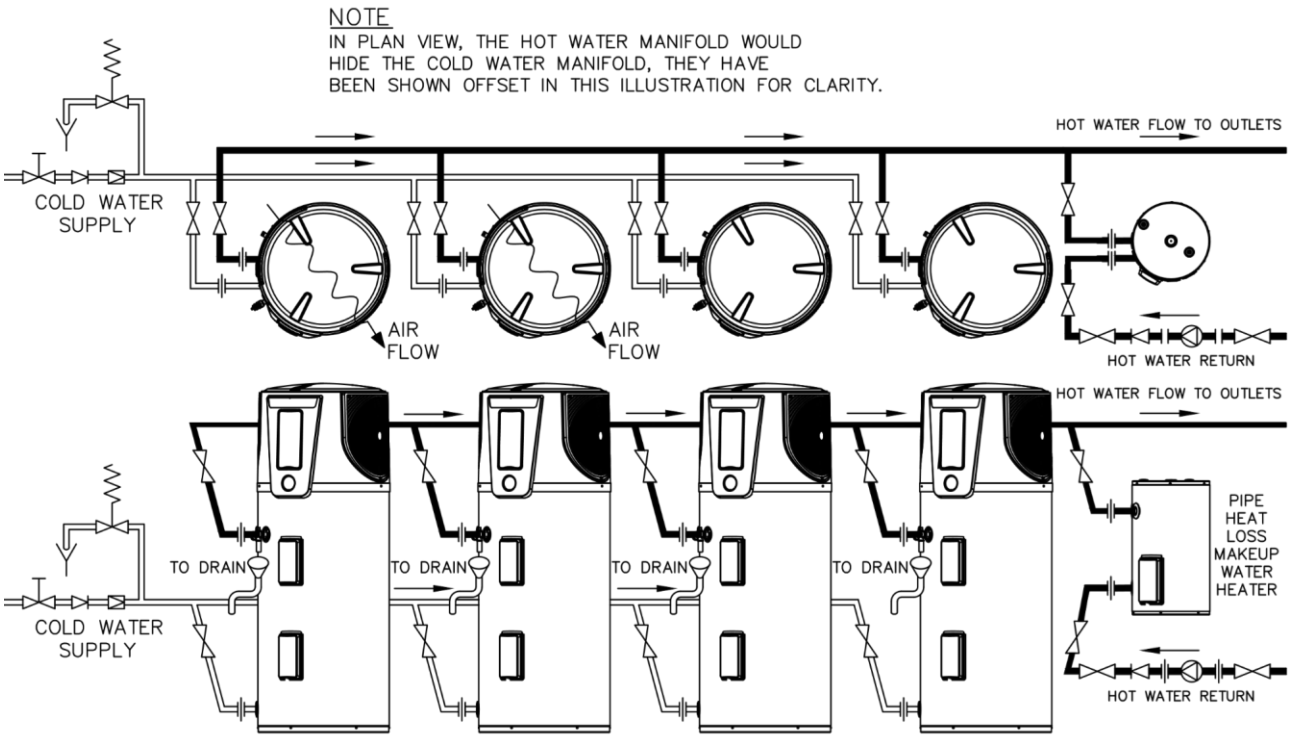

TYPICAL INSTALLATION – MULTIPLE 571D270 HEAT PUMP WATER HEATERS – INLINE BOOSTING

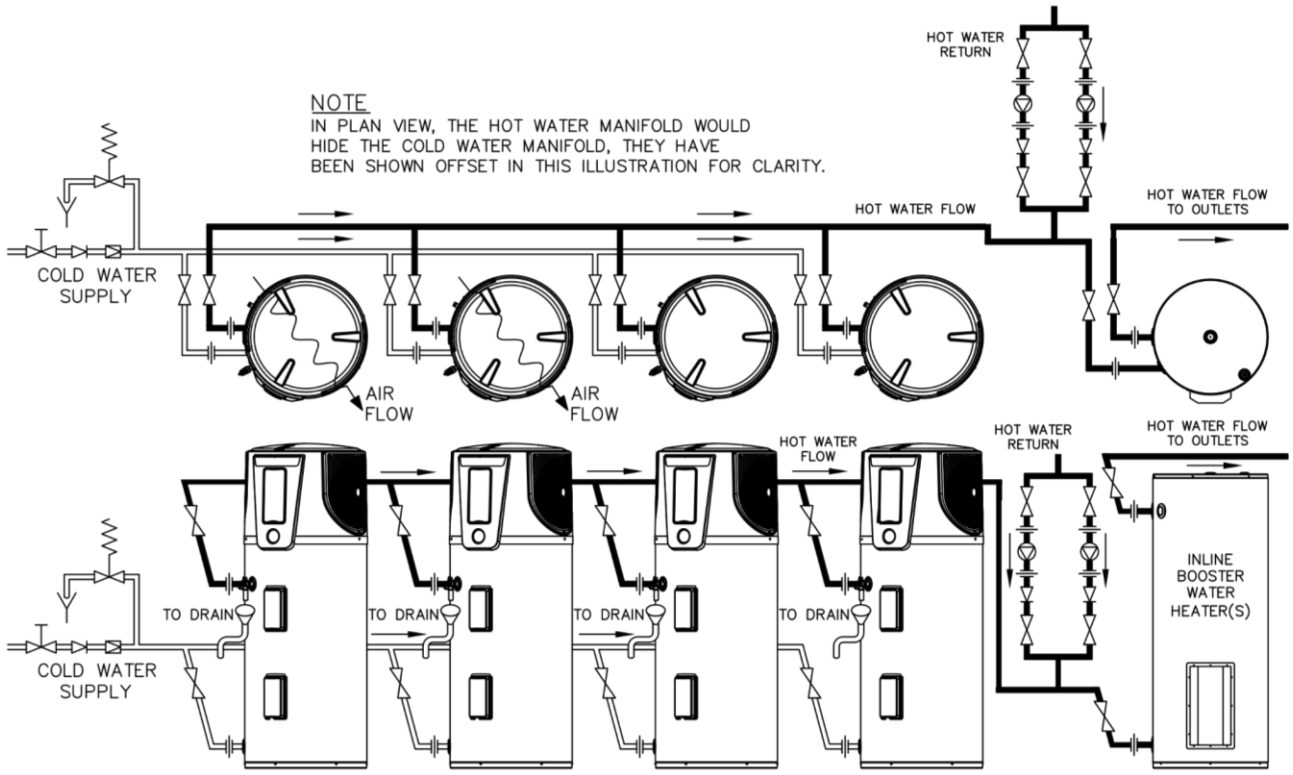

LEGEND

- STOP VALVE
- NON RETURN VALVE
- PRESSURE LIMITING VALVE
- EXPANSION CONTROL VALVE
- GATE VALVE
- CIRCULATOR
- UNION
- TUNDISH
- DIRECTION OF FLOW
- COLD WATER SUPPLY
- HOT WATER FLOW & RETURN

MANIFOLD ARRANGEMENT – MULTIPLE 571D270 HEAT PUMP WATER HEATERS

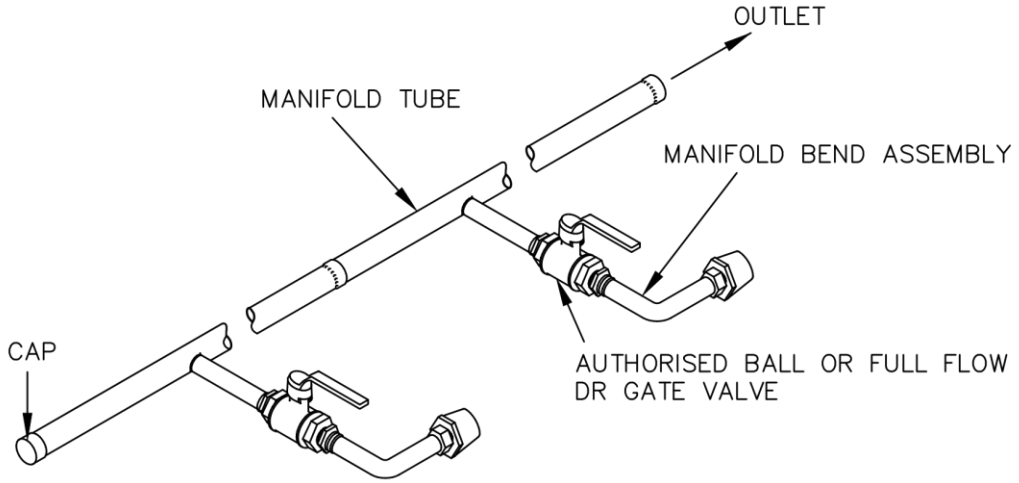

Hot Manifold Assembly

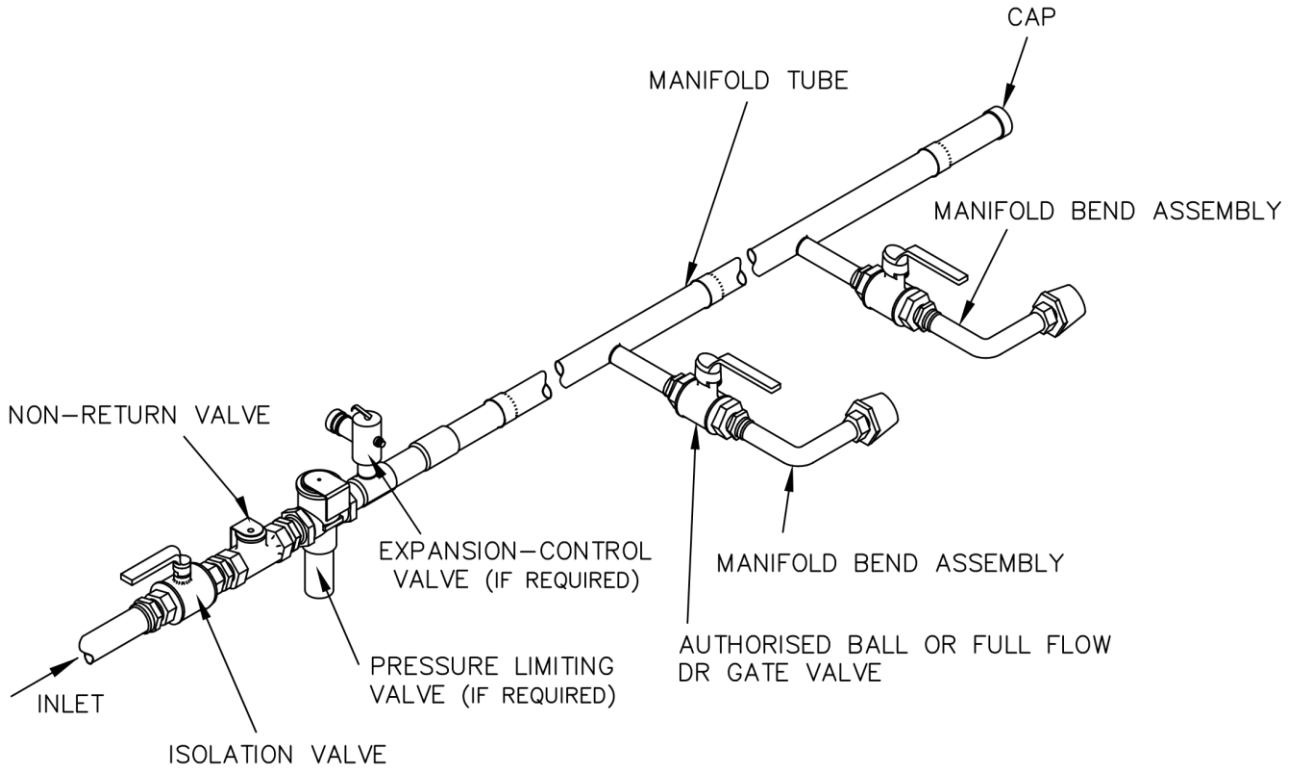

Cold Manifold Assembly

TO FILL AND TURN ON THE WATER HEATER

The power supply to the water heater must not be switched on until the water heater is filled with water and a satisfactory megger reading is obtained.

- Open all of the hot water taps in the house (don't forget the shower).
- Open the cold water isolation valve fully to the water heater.

  Air will be forced out of the taps and the air bleed valve.
- Close each tap as water flows freely from it.
- Check the pipe work for leaks.
- Inspect for leaks at the temperature pressure relief valve connection to the water heater.

  If a leak is detected, close the cold water isolation valve fully and relieve pressure from the water heater by either operating the easing lever on the temperature pressure relief valve or opening a hot tap. Remove the valve and all of its thread sealant from the threads of the valve. Reapply new thread sealant and refit the valve.

  Refer to the procedure in "Temperature Pressure Relief Valve" on page 47.
- Operate the easing lever on the temperature pressure relief valve to check the smooth operation of the valve plunger and that water discharges freely from the drain line. It is very important the lever is raised and lowered gently. The lever should move smoothly and without undue force.

  If the lever cannot be moved or is jerky in its movement, then the valve has been damaged and must be replaced.
- Switch on the electrical supply at the water heater isolating switch on the switchboard and at the isolating switch at the water heater. The Display icons and Selection Keys will illuminate blue and red on the Display Panel.

  Refer to "Display When Electricity Supply is Turned On at the Isolating Switch" on page 15.

  Note: When the electrical supply is switched on, there will be a knocking sound from the heat pump for a short period of time. This is the electronic expansion valve operating. This is normal and not a fault with the heat pump.
- Turn the heat pump "On" at the Display Panel.

  Refer to "Standard Heating Mode" on page 19 and to "Turning the Heat Pump "On" or "Off" at the Display Panel" on page 19.
- Set the Clock on the Water Heater.

  Refer to "Clock" on page 18.
- Set the Timer period(s) if required.

  Refer to "Timer" on page 21.

The heat pump may take up to 5 minutes to commence operating when the power supply is switched on. The heat pump will only operate when the water in the storage tank requires heating and power is available at the water heater.

If the ambient air temperature is below -5°C or above 43°C and the system calls for heating, the heat pump will not operate and the electric heating unit will operate instead.

When the heat pump is operating, the system may switch to the electric heating unit if it detects that the ambient air temperature is below the minimum operating temperature of -5°C or above the maximum operating temperature of 43°C. It may also switch back to heat pump operation from the electric heating unit if it detects the ambient air temperature has moved back to within the heat pump's operating temperature range.

Note: The heat pump may not turn on after having just completed a heating cycle and more hot water is drawn from the water heater, or whilst the heat pump was operating and either power was switched off or it was turned "Off" at the Display Panel. The heat pump will wait at least 3 minutes before operating and the conditions for start-up are favourable.

It is important to wait for five minutes after the heat pump has activated to ensure it continues to operate and is functioning correctly.

Explain to the householder or a responsible officer the functions and operation of the heat pump water heater. Upon completion of the installation and commissioning of the water heating system, leave this guide with the householder or a responsible officer.

TO TURN OFF THE WATER HEATER

If it is necessary to turn off the water heater on completion of the installation, such as on a building site or where the premises are vacant, then:

- Switch off the electrical supply at the water heater isolating switch on the switchboard and at the isolating switch at the water heater.
- Close the cold water isolation valve at the inlet to the water heater.

Notes

- The freeze protection system will be rendered inoperable if electrical power is not available at the water heater.
- Damage caused by freezing due to the unavailability of power at the water heater is not covered by the Rheem warranty (refer to "Terms of the Rheem Warranty" on page 4).
- If the power has been switched off to the water heater and there is a risk of freezing, then it is necessary to drain the water heater (refer to "Draining The Water Heater" on page 55).

DRAINING THE WATER HEATER

⚠ **Warning:** Exercise care, as water discharged from the water heater may be of a very high temperature.

To drain the water heater:

- Turn off the water heater (refer to "To Turn Off The Water Heater" on page 55).
- Close all hot water taps.
- Operate the relief valve lever - do not let the lever snap back or you will damage the valve seat. **It is very important the lever is raised and lowered gently**.

  Operating the lever will release the pressure in the water heater.
- Undo the union at the cold water inlet and attach a hose.

  Let the other end of the hose go to a drain.
- Open the relief valve by holding the lever in the raised position.

  This will let air into the water heater and allow the water to drain through the hose.

This page is intentionally blank.

INSTALLATION REPORT

Dear Installer / Customer
A copy of this installation report filled out in full and signed can be attached to an STC Assignment Form (where applicable) as a method to demonstrate proof of installation. It can be copied and kept for your records.

Installer, please complete all details below

Owner's Name							
Installation Address							
Suburb				**Telephone Home**			
State				**Work**			
Postcode				**Mobile**			
Email Address							
Installing Company / RSS / Agent				**No. of Stories of Install**	Single	Other	1.
Installer's Name				**Installation Date**			
Type of Installation (please circle)	Replace Complete Solar System	Replace Solar Tank	Replace Electric or Gas	Replace Heat Pump	New Building	New Install on Existing Building (not replacing a unit)	Other
System Model No				**System Type**			
Tank Model No				**Tank Serial No**			
Electric Booster (please circle)	Electric continuous	Off Peak 1 (night)	Off Peak 2 (night & day)	Other			

If replacing a water heater, please give details

Brand		**Model No**		Electric	Gas
If a Rheem unit	Tank Serial No		Date of manufacture		
Collector Serial No's	1)	2)	3)	4)	
Comments					
Signature:	Installer:		Customer:		
Date					

This page is intentionally blank.

This page is intentionally blank.